TOWN OF COUPEVILLE
P. O. Box 725
COUPEVILLE, WA, 98239

WA DOH ID # 155509

2009 to 2014
WATER SYSTEM PLAN

George Bratton, P.E.
Civil Engineer
1252 S. Farragut Drive
Coupeville, WA 98239
(360) 678-4552

September 2009

Table of Contents

I. PURPOSE ..... Page 1

II. BACKGROUND ..... Page 2

III. DESCRIPTION OF SYSTEM ..... Page 3

IV. REVIEW OF 1997 & 2003 PLANS ..... Page 12

V. PLANNING ..... Page 14

VI. DESIGN CRITERIA ..... Page 20

VII. SYSTEM EVALUATION ..... Page 24

VIII. RECOMMENDED IMPROVEMENTS ..... Page 26

IX. CAPITAL FACILITIES PLAN ..... Page 27

X. FINANCES ..... Page 28

XI. OPERATION & MAINTENANCE ..... Page 29

XII. STANDARD SPECIFICATIONS ..... Page 30
WATER MAINS

Tables

Table 1 In-Town Wells
Table 2 Out-of-Town Wells
Table 3 Water Rights
Table 4 Water Quality – Raw Water IOC Selected Parameters
Table 5 Distribution System Inventory
Table 6 Distribution System Appurtenances
Table 7 1997 to 2002 Water System Plan
Table 8 2003 to 2008 Water System Plan
Table 9 Typical ERU Assessment by Customer Classifications
Table 10 Six-year Capital Facilities Plan

Calculations

Number of Allowable ERUs
Reservoir Sizing
Network Hydraulic Analysis
Water Right Self-assessment (in Appendix Y)

Drawings

Retail Service Area Map
Town Zoning Map
Service Area Map, Land Use Description
Water & Sewer Facilities, In-Town System
Water Facilities, Out-of-Town System
System Schematic
Computer Schematic
Capital Improvement Program
Water Quality Monitoring Sites

With Standard Plans and Specifications (see Appendix L)

W-1	Standard Plan,	Trench Details
W-2	Standard Plan,	Thrust Block Details
W-3A	Standard Plan,	Fire Hydrant Details - Road Shoulder
W-3B	Standard Plan,	Fire Hydrant Details – Behind Road Ditch
W-4	Standard Plan,	Gate Valve Details
W-5	Standard Plan,	Blow-off Assembly Details
W-6A	Standard Plan,	Air Release Valve Assembly Details - Vault
W-6B	Standard Plan,	Air Release Valve Assembly Details – Hot Box
W-7	Standard Plan,	Casing Pipe Details
W-8	Standard Plan,	Curbside Water Sample Station Details
W-9	Standard Plan,	Flushing, Disinfection & Pressure Test Details
W-10	Standard Plan,	Residential Service Details
W-11	Standard Plan,	Residential Service Connection Details
W-12	Standard Plan,	Commercial Service Connection Details
W-13	Standard Plan,	Easement Located Meter Details
W-14	Standard Plan,	Bank of 3 to 6 Meter Details
W-15	Standard Plan,	Compound Meter Details
W-16	Standard Plan,	Sewer Separation Details
W-17	Standard Plan,	0.75" & 1" RPBA Details
W-18	Standard Plan,	1.5" & 2" RPBA Details
W-19	Standard Plan,	0.75" & 1" DCVA Details
W-20	Standard Plan,	Fire Line DCDA Details
W-21	Standard Plan,	Hydrant RPBA Details
W-22	Standard Plan,	DCVA & RPBA Application Details
W-23	Standard Plan	Erosion Control – Street R-O-W Details
W-24	Standard Plan,	Erosion Control – Filter Fence & Straw Bale Details
W-25	Standard Plan,	Utility Control Details - Hydrants
W-26	Standard Plan,	Utility Control Details – Street Cross-sections
W-27	Standard Plan,	Cathodic Protection – Anode Placement
W-28	Standard Plan,	Cathodic Protection – Test Points

Appendices

A. Applicable Correspondence (WA DOH, WA DOE)
B. Water Rights
C. Well site approvals
D. Well pump curves
E. Well logs
F. Declaration of covenants/restrictive covenants
G. Well pump test results, hydrogeologist's reports
H. Booster pump curves (proposed pump station)
I. Island County Franchise agreement
J. Easements
K. Island County Service Area Agreement
L. Standard Plans and Specifications
M. Water Conservation Plan, Water Use Efficiency Rule
N. Water Shortage Response Plan
O. Cross Connection Control Program
P. Wellhead Protection Plan
Q. Water Quality Monitoring Plan
R. Emergency Plan
S. Corrosion Mitigation Plan
T. Seawater Intrusion Mitigation Plan
U. Maintenance Program
V. Safety Program
W. Financial Viability Assessment
X. Town Code – Chapter 13.08 (service policy / rate structure)
Y. Water Supply and Demand Forecast, *WSP* Consistency Statement Checklist, Water Right Self-assessment
Z. S.E.P.A Checklist

Reference Documents

Previously Submitted to WA DOH

The following reports have been previously submitted to the WA Department of Health.

Hydrogeologist Reports with Well Pumping Test Results

Wells 1 and 4 Water Analysis	August 1993	Applied Geotechnology
Water Supply Development at the Fort Casey Well Field	September 1994	AGI Technologies
Town of Coupeville Well 6 Ground Water Evaluation	March 1995	AGI Technologies
Town of Coupeville Aquifer Evaluation at the Fort Casey Well Field	April 1995	AGI Technologies
Potential Impacts of Proposed Increase in Withdrawals from Fort Casey Well Filed, Response to Department of Ecology	May 1996	AGI Technologies
Well 1-83 Rehabilitation Results	August 1996	AGI Technologies
Town of Coupeville Production Wells 4 & 7 Testing Report	January 2003	AGI Technologies
Town of Coupeville Well 1-90 Testing Report	June 2003	AGI Technologies
Town of Coupeville Well 1-06 Construction and Testing Report	October 2006	AGI Technologies
Town of Coupeville Keystone Hill Well Construction and Testing Report	April 2008	AGI Technologies

Executive Summary

TOWN OF COUPEVILLE
2009 to 2014 WATER SYSTEM PLAN

BACKGROUND

Under WAC 246-290-100, the Town of Coupeville is required to submit a Water System Plan for review and approval by the Washington Department of Health. The plan must be updated and submitted to WA DOH for approval every six years.

The purposes of this *Water System Plan* are to provide:

1. An inventory of the major water system facilities.
2. A summary of the improvements made to the system within the period of the 1997 to 2008.
3. An evaluation of the present system.
4. Recommendations for improvements necessary for the system to comply with the Washington Department of Health (WA DOH) guidelines.
5. Budget-level cost estimates for recommended system improvements.
6. A report on the status of the various management and operation programs required by the WA DOH.

The previous water system plan was approved on September 8, 2003. Approval of the plan was granted through September 8, 2009.

DESCRIPTION OF WATER SYSTEM

Service Area

The Town supplies water to both in-Town and out-of-Town customers. The attached drawing shows the Town's Retail Service Area. The service area contains other public water systems. The Town's water service area includes all parcels not included in the service area of another public water system.

A new service area agreement with Island County was signed in 2006. The new agreement defines a water service area with a population that can be supplied with the water rights granted by the WA Department of Ecology. The WA State " 2003 Municipal Water Law" established a duty of a municipal (government) water purveyor to serve new customers in an approved retail water service area. The cost to provide service may be recovered from the applicant for service through policies established by the Town.

Sources of Supply

The Town presently obtains water from two groundwater fields denoted as the In-Town well field and the Fort Casey well field. The Town also obtains water from a deep well (Well No. 6) located on South Main Street that due to its depth is not classified as part of the In-Town well field in regards to water quality.

Of the six In-Town wells, two wells (Well Nos. 4 and 7) are now used as operating sources, two wells are used as emergency sources (Well Nos. 1 and 6), and two wells are used for monitoring groundwater level. The two operating sources can currently supply a total of 420 gpm.

The Fort Casey well field is located at Wanamaker Road and Keystone Hill Road, approximately 5 miles southeast of the Town. The Fort Casey well field was originally developed in the early 1900's by the U.S. Army to supply Fort Casey. The Town purchased the 30 acre well field and transmission main thereto in 1950's. In 1975, utilizing a Washington Department of Health grant, an additional 25 acres was purchased immediately to the north to provide a total of 55 acres.

The Fort Casey source in the early 1900's consisted of a cistern and infiltration gallery. These facilities can be seen running along the north side of Wanamaker Road. Due to the risk of microbiological contamination from the influence of surface water on the shallow groundwater source, the Town stopped using the cistern and infiltration gallery in 1997.

In 1963 to increase supply the Town started drilling wells in the southern, lower elevation portion of the well field. Seven wells in total were drilled from 1963 to 1987. Of the seven wells, only four are currently operated as sources of supply (Well Nos. 1-87, 2-87, 3-87 and 4-87). The production from these wells ranged from 10 to 27 gpm). To further increase supply, two wells (Well Nos. 1-90 and 1-06) were drilled in the northern, high elevation portion of the well field. The wells produce 40 gpm and 45 gpm, respectively.

The Fort Casey well field is operated as the lead source of supply. The In-Town Well Nos. 4 and 7 are used as lag sources to meet high water demand periods. The Fort Casey well field is used as the lead source to reduce the risk of seawater intrusion in the In-Town well field and to utilize the better water quality of the Fort Casey treated sources.

The Town has water rights for 970 gpm and 688 acre-feet per year. In 2007 the WA Department of Ecology approved a change in the points of withdrawal for the Town's water rights to permit all rights to apply to the Smith Prairie area of Central Whidbey Island.

With approval of this change in water rights, in 2008 the Town drilled a well on Keystone Hill Road (Well 1-08). The well has a safe yield of 250 gpm. Approval was granted by the WA Department of Health in April 2009 for connection of the well to the Town's system. The project to equip the well with a pump and install the pipeline to connect the well to the Fort Casey treatment plant is included in the six-year capital improvement plan.

Water Quality and Treatment

In general, the water supplied to the customer is classified as very hard ground water. Water of this quality may cause white calcium deposits on faucets, in sinks, on glassware, and on the heating element in the hot water tank.

The water quality of the sources of supply complies with US EPA standards except for the following:

In-Town well field:	manganese, electrical conductivity and total dissolved solids
Fort Casey well field:	iron and manganese

The levels of manganese in the In-Town operating wells range from 0.13 to 0.16 mg/L compared to the maximum contaminant level (MCL) of 0.05 mg/L. The manganese and iron levels in the Fort Casey wells range from 0.054 to 0.16 for manganese, and 0.02 to 0.30 for iron, respectively. The Fort Casey water treatment plant reduces the levels of iron and manganese in the water supplied to the system to below the MCL.

Iron and manganese are classified as a secondary or non-health contaminant. A high level of manganese causes aesthetic "dirty or black water" problems. The primary impact of the high levels of electrical conductivity and total dissolved solids are to increase the corrosiveness of the water.

In 2001 the US EPA reduced the MCL for arsenic from 0.050 mg/L to 0.010 mg/L. The arsenic levels of the In-Town range from 0.008 to 0.009 mg/L. The current operating wells at Fort Casey have 0.002 mg/L of arsenic. The new Keystone Hill well (Well 1-08) has an arsenic level of 0.009 mg/L.

Both the In-Town wells and the Fort Casey wells supply water with a noticeable level of hydrogen sulfide (rotten egg odor).

The Town has two water treatment plants, designated as the In-Town Water Treatment Plant and the Fort Casey Water Treatment Plant.

The In-Town plant was constructed in 1977. Treatment was by an electrodialysis reversal (EDR) process. Although the plant had the capability to significantly reduce the level of chloride (from seawater intrusion in Well No. 1), its EDR treatment of the water had the primary benefit of reducing the levels of total dissolved solids, conductivity and hardness. Although the EDR equipment could reduce the level of chloride from Well No. 1, this well was not a regular operating source except for brief use for maximum day demand.

The electrical equipment for one of the two EDR units was damaged beyond repair in 1995. In October 1996, approval was obtained from the Washington Department of Health to replace the treatment process. The new treatment process could consist of oxidation and filtration to remove iron, manganese and hydrogen sulfide. Until the new oxidation and filtration system is installed, the only treatment provided is limited aeration in the raw water tank, followed by chlorination.

Initially, the U.S. Army operated the Fort Casey well field to supply water to the fort. Water treatment consisted of chlorination, followed by filtration. After the transfer of these facilities to the Town, the filtration system was abandoned. For a time, the water was treated for manganese by the addition of a sequestering agent. The addition of a sequestering agent was unsuccessful in preventing the precipitation of manganese at the ends of the system. Its addition also raised concern about providing nutrients for bacteria regrowth in the distribution system. In 1992, with the approval of the

Washington Department of Health, the sequestering treatment was discontinued.

Approval was also obtained in October 1996 to install water treatment at the Fort Casey Well Field. The new plant has been in operation since 1998. The new treatment process consists of oxidation and filtration to remove iron, manganese and hydrogen sulfide.

Storage, Pumping and Pressure Reduction

The Town's primary storage is located at two 500,000 gallon reservoirs on Pennington Hill. The reservoirs (designated the Sunset Terrace reservoirs) are of steel standpipe design, 65 feet in height, 37.5 feet in diameter. The reservoirs are located at the point of highest ground elevation within the Town. The top water level is 295 feet. The first reservoir was constructed in 1977; the second in 1996. Following the construction of the second reservoir, the first reservoir was rehabilitated and its base modified to improve its stability during an earthquake. The site piping was replaced with restrained joint ductile iron pipe, and earthquake (flexible) couplings were installed at the reservoir isolating valves.

The present useful storage from the two Sunset Terrace reservoirs is only 333,300 gallons, due to the tank's limited height. The balance of storage in the Sunset Terrace reservoirs is needed to maintain system pressure above 20 psi at the high elevations within the Town. To increase the amount of useful storage, a booster pump station and high elevation service area is planned for Pennington Hill.

The entire distribution system is supplied by gravity from the Sunset Terrace reservoirs. Pressure reduction is provided for the Fort Casey State Park, SPU Campus and downstream customers because of the concern of failure in the old cast iron pipe (c 1900) within the State Park and SPU Campus and leaks in the Town's steel mains.

Distribution System

The total length of distribution mains in the service area is approximately 27 miles. The out-of-Town portion constitutes 52 percent the distribution system. Approximately 23 percent of the customer accounts are in the out-of-Town service area.

2002 to 2008 SYSTEM IMPROVEMENTS

The following improvements were completed under the 2002 to 2008 Water System Plan.

1. Increased supply from the Fort Casey well field by connecting Well 1-90 and drilling Well 1-06.
2. Maintained production from the In-Town well field by rehabilitating Well 4.
3. Drilled Well 1-08 on Keystone Hill Road.
4. Installed the following water mains:
    a. In-town replacement, 2,480 feet
    b. In-town new installation (by developers), 4,120 feet
    c. Out-of-town replacement, 4,400 feet
    d. Out-of-town new installation, 3,450 feet

RECOMMENDED IMPROVEMENTS AND SIX-YEAR BUDGET

The following table summarizes the capital improvements proposed in this *Water System Plan*. All costs are in current-year dollars.

Six-year Capital Facilities Plan

		Cost	Year
I	FACILITIES		
	A Wells		
	Purchase of well easement	$50,000	2010
	Ft. Casey emergency generator	$50,000	2012
	Keystone Hill raw water line	$425,000	2009
	Equip Well 1-08	$82,000	2009
	Rehabilitate Wells 4 & 7	$38,000	ongoing
	Rehabilitate Wells 1-90 & 1-06	$38,000	ongoing
	Storage building at Ft. Casey	$25,000	2010
	B Treatment		
	(no projects)		
	C Storage and pumping		
	Pennington Hill booster pump	$50,000	2009
	Earthquake valve Sunset Terrace Tank 1	$40,000	2009
	D Telemetry		
	Replace existing telemetry system	$80,000	2009
II	NEW WATER MAINS		
	A In-Town		
	Pennington pumped zone (Phase 1)	$18,000	2009
	B Out-of-Town		
	(no projects)		
III	WATER MAIN REPLACEMENT		
	A In-Town		
	Madrona Way (Phase 1)	$93,000	2009
	Fourth Street, Main to Kinney (remaining work)	$43,000	2009
	B Out-of-Town		
	(no projects)		
IV	MISCELLANEOUS		
	A Air release valves		
	Assumes 10 new installations at $1,000 each	$10,000	2010
	Assumes 5 replacements at $800 each	$4,000	2013
	B Water meters		
	1 Source meter testing and repairs/replacement	$12,000	over
	2 Large meter testing and repairs/replacement	$12,000	six
	3 Small meter replacement	$24,000	years
	Total	$1,094,000	

The current financial plan assumes that all future water system improvements will be financed on a pay-as-you-go basis with the exception of equipping and connecting Well No. 1-08 which is assumed to be funded by a Drinking Water State Revolving Fund loan. Water rates and charges will not be increased.

ADOPTION OF WATER USE EFFICIENCY MEASURES

The 2003 Municipal Water Law and subsequent additions thereto impose on all Group A public water systems (now defined as government owned systems) the requirements to (1) set water use efficiency goals though a public meeting process, and (2) set water use efficiency measures. The numbers of efficiency measures to be evaluated and implemented are based on the Purveyor's number of service connections.

The water efficiency goal, established in previous water system plans, is a maximum day demand of 474 gallons per day per equivalent single-family residential unit. The following conservation measures were considered and/or implemented in previous water system plans. Measures considered but not implemented are denoted by letter "C" in the right-hand column, the measures implemented are denoted by letter "I".

1	Residential service meters	I
2	Water conservation rate structure (inclining rate)	I
3	Water bill showing consumption history	I
4	Public education – water conservation brochures mailed to customers	I
5	Public education – speakers / information display at public meeting(s)	I
6	Public education – low flow water use landscaping	I
7	Residential toilet retrofit program (low water use units)	I
8	Residential showerhead replacement program (low water use units)	I
9	Commercial toilet, showerhead, clothes washer/dishwasher replacement	I
10	Water reuse – water treatment plant effluent for residential irrigation	
11	Water reuse – storm water collection for residential irrigation	
12	Water reuse – water treatment plant effluent for commercial irrigation	C
13	Water reuse – storm water collection for commercial irrigation	C
14	Water reuse – WTP effluent or storm water for aquifer recharge	C

The Town has considered and established the number of conservation measures required by the Water Use Efficiency Rule, and has established a very stringent conservation goal. With adoption of this Water System Plan, the previous established conservation measures and goal are reaffirmed.

TOWN OF COUPEVILLE
2009 – 2014 WATER SYSTEM PLAN

I. PURPOSE

The purposes of this *Water System Plan* are to provide:

1. An inventory of the major water system facilities.
2. A summary of the improvements made to the system within the period of the 1997 to 2008.
3. An evaluation of the present system.
4. Recommendations for improvements necessary for the system to comply with the Washington Department of Health (WA DOH) guidelines.
5. Budget-level cost estimates for recommended system improvements.
6. A report on the status of various management and operation programs required by the WA DOH.

This Plan includes the following:

(1) Standard specifications and construction details for the extension and replacement of water mains.

(2) Cross Connection Control Program.

(3) Water Conservation Plan and Water Shortage Response Plan.

(4) Wellhead Protection Plan.

(5) Water Quality Monitoring Plan (e.g., Coliform Monitoring Plan).

(6) Emergency Plan.

(7) Corrosion Control Plan.

(8) Seawater Intrusion Mitigation Plan.

(9) Six-year and twenty-year capital improvement programs.

(10) Financial Viability Assessment.

The above noted operating programs and plans updated for this *Water System Plan* are also incorporated into the *Management and Operations Manual*.

II. BACKGROUND

The Town of Coupeville *(ID #155509)*, hereinafter referred to as the Town or Purveyor, is located in the center of Whidbey Island.

The previous water system plan was approved on September 8, 2003. Approval of the plan was granted through September 8, 2009.

The WA DOH approval of the *1997 to 2002 Water System Plan* authorized the Town to supply 1,285 equivalent single-family residential units (ERUs). With WA DOH approval of the *2003 to 2008 Water System Plan* and subsequent revision thereof, the Town was authorized in 2008 to supply 1,385 ERUs.

The limited authorization of only 100 additional ERUs was based on Island County's assessment that the current In-Town sources of supply are a high risk for seawater intrusion. The County imposed limit of an additional 100 ERUs will remain in place until low risk sources are brought on-line.

The *2003 to 2008 Water System Plan* was found to be consistent with the Public Water System Coordination Act (70.116 RCW) and Island County Coordinated Water System Plan. Approval was given to the Town's *Standard Specifications for Water Mains* for the installation of distribution mains without prior submittal to WA DOH of project reports, subject to professional engineer's submittal of project certification.

The Town supplies water to both in-Town and out-of-Town customers. The Town entered into a new service area agreement with the County in 2006. This was done to clarify the responsibility of the Town for providing service in Central Whidbey Island.

Oversight of the operation of the water system is by Town Council. The current Mayor and Council Members are:

Mayor Nancy Conard

Councilmember Ann Dannhauer
Councilmember Bob Clay
Councilmember Molly Hughes
Councilmember Dianne Binder
Councilmember Jim Phay

Day to day management of the water system is under the supervision of the following Town staff:

Malcolm Bishop, Public Works Director	Operator certification # 010104
William LaRue, Water Superintendent	Operator certification # 003735

III. DESCRIPTION OF SYSTEM

The general configuration of the water system is shown in the drawings in the appendices to this Plan. For the purposes of discussion, the facilities have been grouped into areas of supply; water quality and treatment; storage, pumping and pressure reduction; and distribution.

Sources of Supply

The Town presently obtains water from two groundwater fields denoted as the In-Town well field and the Fort Casey well field.

The In-Town well field, comprising of Well Nos. 1, 2, 4, 5 and 7, withdraws water from USGS designated Aquifer 'C'. In-Town Well No. 6 withdraws water from USGS designated Aquifer 'A'.

The following is a summary of the In-Town well construction details:

Table 1
In-Town Wells

	Operation Status	Year Drilled	Diameter (inches)	Depth (feet)	Pump (hp)	Production (gpm)
Well No. 1	Emergency	1928	12	190	15	160
Well No. 2	Monitoring	1949	8	240	NA	NA
Well No. 4	Operating	1967	8	206	30	210
Well No. 5	Monitoring	1969	8	270	NA	NA
Well No. 6	Emergency	1994	8	520	30	200
Well No. 7	Operating	2000	8	270	30	210

Well No. 2 is located adjacent to Well No. 4. Well No. 4 replaced Well No. 2. Well No. 2 is not equipped, but is used as a monitoring well for Well No. 4.

Well No. 5 is located adjacent to Well No. 7. Well No. 7 replaced Well No. 5. Well No. 5 is not equipped, but is used as a monitoring well for Well No. 7.

Well No. 1, constructed in 1928, was returned to service in 1989 to augment supply during peak demand periods. Only limited use was approved by the Washington Department of Health for Well No. 1, due to concerns of seawater intrusion. Figure 1 shows the areas of potential seawater intrusion problems in Central Whidbey Island. Well No. 1 is now an emergency source of supply.

The three In-Town operating wells (well Nos. 1, 4 and 7) discharge into a common transmission main to the In-Town water treatment plant.

Well No. 6 pumps into the distribution system.

The Fort Casey well field is located at Wanamaker Road and Keystone Road, approximately 5 miles southeast of the Town.

The Fort Casey well field was originally developed in the early 1900's by the U.S. Army to supply Fort Casey. The Town purchased the well field and transmission main thereto in 1950's. In 1975, utilizing a Washington Department of Health grant, an additional 25 acres was purchased immediately to the north. The grant was for the purpose of purchasing land to provide a protected watershed. The well field now occupies a 55-acre tract of land.

The Fort Casey well field also withdraws water from USGS designated Aquifer 'C'.

The following is a summary of the Fort Casey well construction details:

Table 2
Out-of-Town Wells

	Operation Status	Year Drilled	Diameter (inches)	Depth (feet)	Pump (hp)	Production (gpm)
Cistern	Monitoring	1910	309	24	NA	NA
Well No. 3A	Monitoring	1963	6	50	NA	NA
Well No. 1-83	Monitoring	1983	8	300	NA	NA
Well No. 1-87	Operating	1987	6	66	2	14
Well No. 2-87	Operating	1987	6	90	1.5	27
Well No. 3-87	Operating	1987	6	69	2	10
Well No. 4-87	Operating	1987	6	93	5	21
Well No. 1-90	Operating	1990	8	238	5	40
Well No. 1-06	Operating	2006	8	203	7.5	45
Well No. 1-08	Unconnected	2008	12 (8)	200	NA	250

Production from the Fort Casey well field in 1996 was 135 gpm, including the cistern and connecting infiltration gallery credited for 30 gpm as the safe yield in the fall. The abandonment of the cistern and infiltration gallery reduced the production to 105 gpm.

Production in the five shallow wells has steadily declined due to the presence of iron and sulfate-reducing bacteria. Even with frequent shock disinfection of the wells, production is now less than 80 gpm.

With completion of Well Nos. 1-90 and 1-06, the total production from Fort Casey was increased to 157 gpm. These two wells also experience a decline in production due to the presence of iron and sulfate-reducing bacteria.

Well No. 1-08, also know as the Keystone Hill well, is drilled in the Smith Prairie area north of the Fort Casey Well Field. The well withdraws water from USGS designated Aquifer 'C', but at a point further to the center of the island. Because the well delivers water to the Fort Casey water treatment plant, it is included as a Fort Casey source.

The following is a summary of the Town's water rights:

Table 3
Water Rights

WA DOE file #	Certif. #	Priority Date	Qf (gpm)	Qi (afy)
G1-00845SWRIS	880-D	1/1/1928	250	26
G1-01397CWRIS	1174	3/3/1950	150	42
G1-08242CWRIS	5618	8/11/1966	150	240
G1-20359CWRIS	G1-20359C	11/20/1972	210	190
G1-20378CWRIS	G1-20378C	11/20/1972	210	190
		Total:	970	606

The above water rights were changed in 2008 to allow withdrawal from within the following area of Central Whidbey Island:

> Sections 2, 11, 12, 13 and 14 of Township 31 North, Range 1 East, W.M.
> Section 33 of Township 32 North, Range 1 East, W.M.

The above area coincides with the location of the current In-Town wells (Section 33) and the Smith Prairie and Fort Casey location of the current and planned future locations of the Out-of-Town wells.

The Fort Casey well field is operated as the lead source of supply. Well No. 4 is the first lag source. Well No. 7 is the second lag source.

Well No. 1 was returned to service in 1989 to supply water to meet peak demand periods. The WA Department of Health approved Well No. 1 for limited use only due to concerns of seawater intrusion.

Well Nos. 4 and 5 were rehabilitated in 1992 and 1993, respectively, to increase the rate of production to a total of 420 gpm. Combined with a change to the Fort Casey well field as the lead source of supply, Well No. 1 was relegated to an emergency source.

Well No. 1 is the first emergency source. Well No. 6 is the second emergency source. The WA Department of Ecology is notified whenever Well No. 6 is placed into operation.

From historic use, Well No. 1 could be placed into operation for about ten weeks before chloride levels would exceed the MCL of 250 mg/L. The background level is about 140 mg/L. With the increased chloride level, the level of the non-coliform bacteria *Pseudomonas* increased from the background level in the aquifer of less than 50 CFU/100 ml to over 200,000 CFU/100 ml.

From the continuous pumping test of Well No. 6, the chloride level will increase above the background level of 200 gm/L after about four weeks due to upconing of the seawater from below the fresh water lens. Exceeding of the 250 mg/L MCL for chloride would occur after about five weeks.

All sources of supply are equipped with the requisite source meter, well head piping check valve and isolating valve, casing "J" vent, and probe tube.

A Wellhead Protection plan is included in the appendices.

A WA DOH "Ground Water Susceptibility Assessment Survey" form has been completed and submitted to WA DOH for each well.

Information on the Island County approval of well sites was submitted with previous water system plans and project reports. Information on declaration of covenants and restrictive covenants for the well sites was submitted with previous water system plans and project reports. Information on the most recent constructed wells, Well Nos. 1-06 and 1-08 are included in Appendix C.

Well No. 1-08 was constructed in an easement obtained from Island County. A copy of the County's well site approval, hydrogeologist's report on the well pumping test, easement and covenants are included in the appendices.

Water Quality and Treatment

The following table shows the inorganic chemistry of the operating sources of supply before treatment.

Table 4
Water Quality – Raw Water IOC Selected Parameters

	Units	MCL	In-Town Well # 4	In-Town Well # 7	Ft. Casey Well # 1-90	Ft. Casey Well # 1-06	Keystone Well # 1-08
Arsenic	mg/L	0.010	0.008	0.009	0.002	0.002	0.009
Iron	mg/L	0.300	0.053	0.063	**0.300**	**0.300**	0.022
Manganese	mg/L	0.050	**0.160**	**0.130**	**0.054**	**0.160**	0.037
Total Nitrate/Nitrite	mg/L	10	<0.5	<0.5	<0.5	<0.5	1.0
Hardness	mg/L	NA	460	370	300	292	210
Chloride	mg/L	250	87	77	41	40	11
Conductivity	µmhos	700	**810**	**750**	600	590	450
TDS	mg/L	500	**620**	**580**	390	390	NR
			(To In-Town WTP)		(To Ft. Casey WTP)		

The lower wells in the Fort Casey well field were not included in the above table. These wells are scheduled to be removed from service as soon as Well No. 1-08 is placed into service. These wells exceed the MCL for iron and manganese, and have high levels of hydrogen sulfide and iron and sulfate-reducing bacteria.

In general, the water supplied to the customer is classified as very hard ground water (hardness greater than 180 mg/L). Water of this quality may cause white calcium deposits on faucets, in sinks, on glassware, and on the heating element in the hot water tank.

The water quality of the sources of supply complies with US EPA standards except for the following:

In-Town well field: manganese, electrical conductivity and total dissolved solids.

Fort Casey well field: Well Nos. 1-90 and 1-06 manganese and iron (at MCL).

Manganese and iron are classified as a secondary, or non-health contaminant. A high level of manganese causes aesthetic "dirty or black water" problems.

The primary impact of the high levels of electrical conductivity and total dissolved solids are to increase the corrosiveness of the water.

The Town has two water treatment plants, designated as the In-Town Water Treatment Plant and the Fort Casey Water Treatment Plant.

The In-Town plant was constructed in 1977. Treatment was by an electrodialysis reversal (EDR) process consisting of two parallel Aqua-Mite XX modular units, manufactured by the Ionics Corporation. Although the plant had the capability to significantly reduce the level of chloride, its EDR treatment of the water from Well Nos. 4 and 5 had the primary benefit of reducing the levels of total dissolved solids, conductivity and hardness. Although the EDR equipment would reduce the level of chloride from Well No. 1, this well was not a regular operating source except for brief use for maximum day demand.

The EDR treatment system was not equipped with a pre-treatment system to remove iron, manganese and hydrogen sulfide. Cartridge filters removed some of these components. However, the water supplied to the system contained a noticeable amount of manganese and hydrogen sulfide.

Water from the wells was discharged at the plant into a raw water reservoir located in the basement of the treatment building. Two transfer pumps supplied the water to the treatment equipment. The treated (product) water was discharged into a product reservoir in the basement of the treatment building. A second set of two transfer pumps supplied the distribution system.

The combined design production capacity (after treatment) of both units was 366 gpm. Between 25 and 30 percent of the raw water supplied to the treatment plant was wasted as concentrated brine produced by the treatment process.

The electrical equipment for one of the two EDR units was damaged beyond repair in 1995. In October 1996, approval was obtained from the Washington Department of Health to replace the (EDR) treatment equipment (WA DOH Submittal #96-0907). The new treatment process will consist of oxidation and filtration to remove iron, manganese and hydrogen sulfide. Until the new oxidation and filtration system is installed, the only treatment provided is limited aeration in the raw water tank, followed by chlorination.

Initially, the U.S. Army operated the Fort Casey well field to supply water to Fort Casey. Water treatment consisted of chlorination, followed by filtration. After the transfer of these facilities to the Town, the filtration system was abandoned.

Prior to 1992, the water from the Infiltration Gallery and Well Field was treated for manganese by the addition of a sequestering agent. The addition of a sequestering agent was unsuccessful in preventing the precipitation of manganese at the ends of the system. Its addition also raised concern about providing nutrients for bacteria regrowth in the distribution system. In 1992, with the approval of the Washington Department of Health, the sequestering treatment was discontinued.

For continued use of the Fort Casey Infiltration Gallery, micro-filtration and improved disinfection would be necessary to comply with the requirements of the Surface Water Treatment Rule.

Approval was obtained in October 1996 to install water treatment at the Fort Casey Well Field. The treatment process consists of:

- Pre-chlorination to control iron and sulfide bacteria in the well water.
- Pre-aeration in the raw water reservoir to remove hydrogen sulfide.
- Oxidation by aeration to form iron and manganese precipitates.
- Removal of iron and manganese by pressure filtration.
- Post chlorination of the product water before discharge into the product water reservoir.

Booster pumps supply raw water to the treatment system. Transfer pumps supply water to the distribution system.

The capacity of the treatment system is 200 gpm. This is greater than the present pumping capacity of the well field.

Typically the laboratory results from the post treatment samples for iron and manganese are < 0.02 and < 0.005, respectively.

Disinfection was initially provided for the In-Town and Fort Casey sources by gas chlorination. With the construction of the Fort Casey Treatment Plant, for reasons of safety, chlorination was changed to the injection of sodium hypochlorite (bleach). The In-Town treatment equipment for gas chlorination, including the gas cylinders, has also been been removed and replaced with injection of sodium hypochlorite.

Well No. 6, an emergency source, is equipped for disinfection with sodium hypochlorite. This well is located at the south side of the High School's playing field.

The distribution system included greater than 10 percent asbestos cement pipe. A sampling program for asbestos fibers is included in Appendix Q. The most recent results are included

The coliform monitoring program is included in Appendix Q.

The disinfection by-product monitoring program, including Stage 2, is included in Appendix Q. The 40/30 certification letter is included. The most recent results are also included

The Lead-Copper monitoring program is included in Appendix Q. Because the water from the In-Town wells is corrosive, a corrosion mitigation plan is included in Appendix S. The plan focuses on blending water with the non-corrosive Out-of-Town wells.

To address the risk of seawater intrusion, a seawater intrusion mitigation plan is included in Appendix T.

Storage, Pumping and Pressure Reduction Facilities

The Town's primary storage is located at two 500,000 gallon reservoirs on Pennington Hill. The reservoirs (designated the Sunset Terrace reservoirs) are of steel standpipe design, 65 feet in height, 37.5 feet in diameter. The reservoirs are located at the point of highest ground elevation within the Town. The top water level is 295 feet. The first reservoir was constructed in 1977; the second in 1996. Following the construction of the second reservoir, the first reservoir was rehabilitated and its base modified to improve its stability during an earthquake. The site piping was replaced with restrained joint ductile iron pipe, and earthquake (flexible) couplings were installed at the reservoir isolating valves.

The present useful storage from the two Sunset Terrace reservoirs is only 333,300 gallons, due to the tank's limited height. The balance of storage in the Sunset Terrace reservoirs is needed to maintain system pressure above 20 psi at the high elevations within the Town. To increase the amount of useful storage, a booster pump station and high elevation service area is planned for Pennington Hill.

Due to its poor condition, the 500,000 gallon reservoir on Engle Road (located approximately 1.5 miles south of Town) was removed from service in 1997.

Two storage reservoirs containing 130,000 gallons (25,000 gallons for raw water storage and 105,000 gallons for product water storage) were installed at the Fort Casey Well Field in 1998.

Distribution System

The following Table III-2 summarizes distribution system inventory:

Table 5
Distribution System Inventory

Diameter	Length (feet) Ductile iron	PVC	Asbestos Cement	Cast Iron (pit cast)	Galv Steel or unknown	Total
12" Ø	4,680	0	0	0	0	4,680
10" Ø	0	11,550	0	0	0	11,550
8" Ø	4,855	45,190	900	0	200	51,145
6" Ø	0	20,320	7,785	640	0	28,745
4" Ø	0	5,760	12,750	5,115	11,150	34,775
3" Ø	0	0	7,650	0	0	7,650
< 3" Ø *						4,950
Sub Total	9,535	82,820	29,085	5,755	11,350	143,495
		58%	20%	4%	8%	27 miles

* All assumed as glued-joint PVC or Galvanized Steel

The Out-of-Town distribution system constitutes 52 percent the distribution system.

Table 6
Distribution System Appurtenances

Description	Number
Number of gate valves	346
Number of fire hydrants	113
Number of blow-off assemblies	16
Number of air release valves	5
Number of SF residential meters (3/4"Ø)	897
Number of commercial, MF residential meters	48
Number of government meters	53
Number of Town backflow prevention assemblies	3
Number of Customer backflow prevention assemblies	128

The number of "customer" backflow prevention assemblies includes only assemblies required by the Town for premises isolation. Other assemblies not relied upon by the Town to protect its distribution system are installed in compliance with the plumbing code.

Water meters are installed on all domestic service connections.

In addition to the above, the system includes 3,600 feet of 4 and 6-inch ductile iron or PVC raw water transmission main from Well Nos. 1, 4 and 7 to the In-Town water treatment plant.

The entire distribution system is currently supplied by gravity from the Sunset Terrace reservoirs.

Pressure reduction is provided at the Engle Road PRV Station for the Fort Casey State Park, SPU Campus and downstream customers because of the concern of failure in the old cast iron pipe (c 1900) within the State Park and SPU Campus and leaks in the Town's steel mains. The PRV Station is equipped with a mainline 6-inch Clayton pressure reducing valve for fire flow, and a parallel 2-inch Clayton pressure reducing valve for domestic flow.

System Control and Monitoring

The current telemetry system utilizes equipment installed in the In-Town Water Treatment Plant and leased telephone lines. The telemetry system controls pumping from the sources of supply based on water level in the Sunset Terrace Reservoir.

The lead source is the Fort Casey water treatment plant. The telemetry system turns on one or both of the transfer pumps at the plant. With the current limited well capacity, only one transfer pump is currently utilized. The control of the wells supplying the Fort Casey treatment system is local to the plant. The wells are turned on based on water level in the raw water storage tank. The telemetry system only controls the transfer pumps.

The lag source is the In-Town water treatment plant. The telemetry system turns on one or both of the transfer pumps at the plant. The control of the Well Nos. 1, 4 and 7 supplying the plant is local to the plant. The wells are turned on based on water level in the raw water storage tank. The telemetry system only controls the transfer pumps. Well No. 4 and Well No. 7 are alternated as the first lag source and second lag source, respectively. Well No. 1 is an emergency source.

The telemetry system is not used to monitor the system. Data loggers are installed to monitor water level in the Sunset Terrace Reservoirs and pressure upstream and downstream of the Engle Road PRV Station.

IV. REVIEW OF 1997 TO 2002 and 2003 TO 2008 PLANS

Table 7
1997 to 2002 Water System Plan

1	Increase the supply of water from the Fort Casey well field	
a)	Abandon the cistern and infiltration gallery that supplied groundwater under the influence of surface water (GWI), rather than provide expensive water treatment.	Completed
b)	Connect Well No. 1-90 in the northern portion of the well field.	Delayed *
c)	Construct a water treatment plant for the wells to remove iron and manganese.	Completed
d)	Construct of water storage reservoirs at the well field to facilitate the pumping of treated water to Town.	Completed
e)	Construct additional wells in the northern portion of the well field to increase production to the maximum allowable under the water right and to reduce the risk of seawater intrusion in the southern portion of the well field.	Delayed *
2	Remove from service the Engle Road 500,000 gallon reservoir.	Completed
3	Replacing the electrodialysis-reversal (EDR) water treatment equipment in the In-Town water treatment plant with conventional oxidation and pressure filtration equipment to remove iron and manganese. After a fire in the electrical equipment, the EDR treatment system was removed.	EDR scrapped, new system not installed
4	Upgrade the telemetry system that controls the wells and pumping systems.	Delayed *
5	Replace the Parker Road water main from Leach Street east to the Town limits.	Completed
6	Replacing the Madrona Way water main from Broadway to Vine Street.	Delayed
7	Construct a booster pump station at the Sunset Terrace Reservoir site and installing a pumped distribution system to supply Pennington Hill (now supplied by gravity from the reservoirs).	Delayed

Note: Items denoted with "*" were completed or are now under construction.

Table 8
2003 to 2008 Water System Plan

1	Connect Well 1-90 and install 3 additional wells at Ft. Casey	Connected 1-90 & 1-06 Drilled 1-08
2	Abandon Ft. Casey wells, cistern and infiltration gallery to WA DOE standards (these facilities are no longer in use)	Delayed
3	Replace Town's telemetry system	Delayed **
4	Install booster pump station and high elevation mains for Pennington Hill	Delayed
5	In the In-Town plant, install one 210 gpm oxidation and pressure filtration system.	Delayed
6	Rehabilitate Town wells to maintain production rates (4-year schedule)	On 3-year schedule
7	Demolish abandoned Engle Road reservoir	Delayed
8	Ongoing replacement program for water mains	4th Street Project

Note: Item denoted with "**" is now under construction.

V. PLANNING

Comprehensive Plan

The Town of Coupeville Comprehensive Plan, dated July 2003, complies with the requirements of the Growth Management Act as set forth in RCW 36.70A.070.

Present and Future Service Area

The present service area of the Town is shown in the accompanying drawing "Retail Service Area Map". No further expansion of the service area is anticipated.

Extension of water mains to supply additional Out-of-Town customers will be done under developer extension agreements. An amendment to the *Water System Plan* will be submitted to WA DOH for each extension.

The land use pattern within the Town is shown in the accompanying drawing "Town Zoning Map". The land use description for the Out-of-Town service area is shown in the accompanying drawing "Service Area Map, Land Use Description".

Service Area Agreement

The signed service area agreement is included in the Appendix K.

System Interties

The Town has not made emergency intertie agreements with other public water systems.

The Town has entered into a letter of understanding (see Appendix A) with the Sarkisian Springs water system (WA DOH ID #137964A) to supply wholesale water. The wholesale supply will allow Sarkisian Springs to abandon their well that is experiencing seawater intrusion. A separate project report will be submitted to WA DOH for approval of the wholesale supply intertie.

Island County Franchise Agreement

The signed franchise agreement for the out-of-Town mains installed in County rights-of-way is included in the Appendix I. The agreement covers all County roads within the service area. The franchise agreement expires in 2025.

Water Supply and Demand Forecast

Details on the current water supply and demand forecast are provided in Appendix Y.

The following information is provided to explain the basis of the design MDD used in the demand forecast.

The allowable number of customers the Town may supply is based on design criteria in the WAC 246-290 and the Washington Department of Health *Water System Design Manual*, August 2001. WAC 246-290-222 states:

- The water system physical capacity shall be established by evaluating the capacity of each system component such as source, treatment, storage, transmission, or distribution, individually and in combination with each other. The evaluation shall identify any limitations on the ability of the system to provide service to all customers.

- The water system physical capacity shall be reported in terms of total equivalent residential units (ERUs).

- The capacity of the sources of supply, treatment, etc., shall be sufficient to provide a reliable supply of water equal to or exceeding the maximum day demand (MDD).

Since the total of equivalent residential units is related to the MDD, the basis of establishing one ERU was the recorded maximum day demand of single-family residential customers served by the Town. In 1992, the monthly and daily water use was monitored for a representative number of "typical" residential homes. Under the same monitoring program, representative customers from several categories of non-single-family residential customers were monitored (e.g., schools, County offices, restaurants).

In 1996, with a stringent water conservation program, the recorded MDD was 359 gpd/ERU. For design the MDD of a single-family residential customer was established as 474 gallons per day (gpd) for design. This provides an allowance for a relaxation of water conservation from the initiation of the conservation program at the start of 1992. The most recent daily monitoring of selected residential area has recorded a MDD of 392 gpd/ERU.

The Town Code establishes that "equivalent single-family residential unit (ERU)" means the amount of water assumed in the water system design for the maximum day demand (MDD). The quantity of water for one ERU shall be the amount established in the Town's Water System Plan approved by the Washington Department of Health." {Chapter 13.04, Section 13.04.020}

Hook-up right fees shall be based on the Town's assessment of the customer's water demand on the number of ERUs. The minimum assessment per customer is 1 ERU. For multi-family and mixed use premises, the number of ERUs assessed to a customer shall be rounded upward to the nearest ½ ERU. {Chapter 13.08, Section 13.08.020 A}

For non-single-family residential customers, the following describes the basis of assessing water demand in terms of equivalent single-family residential units for new customers or existing customers with a change of property use or expansion of premises.

The WA DOH design criteria define the maximum day demand (MDD) and peak hour demand (PHD) in terms of the average day demand (ADD). For example, the MDD is defined as twice the ADD. These "peaking" factors are useful in determining the relative water demand of different classes of customers, since monthly meter readings of customer meters are available. However, the unique rainfall pattern in Island County caused by the Olympic Mountain rain shadow and the Puget Sound convergence zone, and the effectiveness of water conservation makes the use of "standard" multipliers unsuitable for establishing "peaking" factors. Therefore, the Town's Water Supply and Demand Forecast established the relationship between ADD and MDD for various classes of customers.

The water demand of a new customer may be estimated based on the demand of customer in the same classification or an analogous customer classification. Where recorded data is not available in the Town's Water Supply and Demand Forecast, the demand may be estimated based on one or more technical references, including:

a) Table 5-2 "Guide for Non-Residential Water Demand" in the WA DOH *Water System Design Manual.*

b) Assessment of the plumbing fixture unit demand based on the Uniform Plumbing Code.

c) The John Hopkins University research project *Commercial Water Use.*

Because of the level of water conservation and climate factors, the above basic assessment would need to be converted to MDD based on analogous customers in the Town.

Where there is uncertainty in the assessment of the number of ERUs for a new customer, the initial assessment may be considered tentative until a water use record is established. Since the water use will vary within a class of customer, or for a specific customer for different tenants, it is not the intent of the assessment for non-residential customers to precisely determine the number of applicable ERUs. Accordingly, tentative assessment should be made only for special customers where the analogous customer water use cannot be established.

Where a tentative assessment is made, the Town shall make the initial assessment. After a minimum of one year of water use by the customer that includes a typical warm summer, the monthly water usage, and if needed, the record of selected daily water usage, will be used to establish the applicable number of ERUs. The Town will modify the ERU assessment for the purpose of establishing the water hook-up right fee, and shall provide a refund or added charge as appropriate.

For determining the MDD based on meter billing, if no other information is available from the above listed references, a peaking factor of 1.47 (Town average for all consumption for the years 1992 through 2001) shall be used to covert annual ADD to MDD.

The customer may appeal any water demand assessment made by Town staff to the Town Council.

For the purpose of a water hook-up right to the Town's water system, the minimum assessment of water demand for a parcel of property shall be one ERU. For assessment of water hook-up right fees, Table 9 provides guidance on the assessment of additional ERUs for non-single-family residential customers.

The Town does not give a refund in water hook-up right fees for a reduction in demand following a change in occupancy or water use because the capacity has already been capitalized. However, Table 9 may be used in estimating the increase in the available number of ERUs for sale recognizing a reduction in a customers water demand based on a permanent change in occupancy (e.g., rezoning of a property, building renovation, etc.).

Certain categories of institutional and government customers, such as schools, are assumed to have variable water demand based on changes of occupancy loading from year-to-year. A "growth allowance" is provided in the ERU assessment so that an additional hook-up right fee is not necessary unless building modifications are made that allows an increase in occupancy or otherwise permanently increases water use.

Table 9
Typical ERU Assessment by Customer Classification
Minimum Assessment per Customer (parcel of property) is 1 ERU.

Customer	Number of ERUs
Apartments, condominiums and other multi-family residential with common lawns and landscaping, each of 1,000 square feet or less.	½ ERU per Unit
Accessory dwelling unit with kitchen. Limit of one per single-family residential home. Accessory dwelling shall be 1,000 square feet or less.	½ ERU
Offices – up to 30 employees, assuming 15 gpd for each employee (WA DOH *Water System Design Manual*)	1 ERU
Mix use – small offices or retail with apartments above. Number of employees limited to 15. (see offices)	½ ERU for all small offices or retail, plus ½ ERU per residential unit (1,000 sf/unit or less)
Small retail space – no public bathrooms, toilet facilities for staff only	Assume same as offices
Restaurants with toilet facilities, no bar – up to 15 seats, assuming 33 gpd/seat (1992 monitoring of Penn Cove Restaurant and John Hopkins University study's average)	1 ERU

Municipal Water Law

The 2003 Municipal Water Law and subsequent additions thereto impose on all Group A public water systems (now defined as government owned systems) the requirements to (1) set water use efficiency goals though a public meeting process by January 2009, and (2) set water use efficiency measures. These requirements are included with the Water Conservation Plan in Appendix M.

Water Conservation & Water Shortage Response Plan

The water conservation plan and water shortage response plan are provided in Appendix M and Appendix N, respectively.

The water conservation plan includes the Municipal Water Law and subsequent additions thereto requirements pertaining to the water use efficiency measures.

The short and long-range water conservation goal remains as 474 gpd/ERU.

Emergency Plan

An emergency plan is included in Appendix R.

System Vulnerability

The most vulnerable system component is the loss of production from a well or break in a supply line from the Fort Casey water treatment plant. The two emergency sources (Well Nos. 1 and 6) are more than capable of supplying water for the duration of time needed to either replace a well or well pump, or implement the water shortage response plan, etc. In the fall, winter and spring months, any one of the Town's normally operating sources of supply can supply the average day demand.

The Town has not experienced a significant break history.

Corrosion Mitigation Plan

The corrosion mitigation plan related to the Lead and Copper Rule is included in Appendix S.

Seawater Intrusion Mitigation Plan

The seawater intrusion mitigation plan is included in Appendix T. The capital plan includes the development of new sources of supply to address both seawater intrusion and corrosion control.

Service Policies

Service policies are established in the Town Code. The applicable Chapters are included in Appendix X.

Community Participation

The record of community participation in the preparation of the *Water System Plan* is included in Appendix A.

The water use efficiency measures were established at this meeting.

Review Comments

A copy of the *Water System Plan* has been submitted to the Island County Health Department for review and comment. The following adjacent water systems were notified that a copy of the *Water System Plan* is available for their review if desired:

Sarkisian Springs
Admirals Cove Water District
Crockett Lake Water District

Sarkisian Springs was included as the proposed wholesale customer. The two water districts were included as the major purveyors in or adjoining the Town's service area.

All written review comments received from these systems are included in Appendix A.

VI. DESIGN CRITERIA

The design criteria utilized for the evaluation and/or design of the Purveyor's system, includes the major design requirements of the Washington Department of Health (WA DOH *Water System Design Manual*, August 2001) and WAC 246-290. The wording of the WA DOH regulations and design criteria may have been abbreviated herein for this summary. An explanation is provided where more stringent design criterion are utilized than the current WA DOH criteria.

Distribution

1. The system shall provide a minimum of 30 psi (preferably higher) operating pressure to all customers during peak hour demand (PHD) conditions, with the equalizing component of storage depleted. [1] {WAC 246-290-230(5), applicable to for new systems or additions to new systems} The calculation of PHD shall be based on WA DOH guidelines. [2]

2. The system shall provide maximum day demand (MDD) plus fire flow at a minimum of 20 psi at all points throughout the distribution system, with the fire suppression and equalizing storage depleted. {WAC 246-290-230(6)} The calculation of MDD shall be based on WA DOH guidelines.

The 2007 *Water Use Efficiency Rule* changes to the WA DOH regulations {WAC 246-290-420(3)} states that 20 psi shall be provided at the operating hydrant and at least positive pressure throughout the system. The maintenance of a minimum of 20 psi at all points in the distribution system during fire flow is the safety factor for prevention of backflow due to backsiphonage in the customer's service line. The Purveyor is responsible (and legally liable) for any contaminant that enters the Purveyor's distributions system due to backflow.

The 2007 *Water Use Efficiency Rule* changes {WAC 246-290-420(2)} states that during normal operating conditions, for both average and peak hour demand periods, water pressure at the service meter shall be maintained at the approved design pressure, but in no case less than 20 psi. Customers usually complain about pressures as low as 30 psi.

---

1 The revision to WAC 246-290 effective April 9, 1999 changed the design criterion for calculating minimum system pressure. Previously, the 30 psi requirement was based on the depletion of standby storage; now it is based on the depletion of equalizing storage.

2 The previous WAC 246-290 referred to PHD as maximum instantaneous demand (MID). The June 1999 WA DOH guideline "Water System Design Manual" changed the distribution system criterion for the flow rate (gpm) used in hydraulic analysis.

3. All new or expanding water systems shall provide fire hydrants in residential areas at a maximum spacing of 900 ft., or maximum hose lay of 500 ft., whichever is the lesser, and shall provide a basic fire flow from any one hydrant of 500 gpm. This requirement does not apply to rural lots 2.5 acres or larger, or as otherwise provided through alternate fire protection methods in County Code.

4. For new or expanding systems, the minimum water main size shall be 6-inch, except into cul-de-sacs or other locations where further expansion is very improbable, where lines shall not be less than 2-inch.

5. The system shall be equipped with adequate isolating valves, air release valves, blow-off assemblies, etc., for proper system operation and maintenance.

6. An individual service booster pump is allowed as an interim measure (less than six years) where distribution system pressure is deficient.

Supply

7. The minimum production capacity shall equal the maximum day demand (MDD).

8. The establishment of a water conservation program. The program should follow the latest edition of "Water Conservation Planning Handbook for Public water Systems", and "Guidelines and Requirements for Public Water Systems Regarding Water Use Reporting, Demand Forecasting Methodology, and Conservation Programs".

9. A Step-Drawdown Test and a 24 hour Constant-Rate Test conforming to WA DOH guidelines shall be made to support the source's ability to reliably provide a safe yield. Low water demand sources in high production aquifers may continue the Step-Drawdown Test to stabilization, and forego the subsequent 24 hour Constant-Rate Test.

Storage

10. The minimum standby (i.e., emergency) storage shall be equal to the maximum day demand (MDD). Where multiple sources of supply are available, the standby storage may be reduced by the existing pumping capacity of the wells, assuming the highest capacity well is out of service. A minimum standby storage of 200 gpd/ERU, should be provided regardless of the number of, and/or excess capacity of, the sources available.

11. The minimum equalizing storage shall be provided based on the formula: 150 min. x (PHD-Q), where `Q' is the sum of the capacities of the active sources of supply.

12. The minimum fire protection storage for single-family residences shall be based on a fire flow of 500 gpm for 30 minutes (15,000 gallons). Standby storage may be used for fire protection storage.

Equalizing storage is defined as the volume of storage needed to supplement supply of consumers when the peak hourly demand exceeds the total source pumping capacity. Standby storage is defined as the volume of stored water available for use during a loss of source capacity, power or similar short-term emergency.

A reduction in the requirement for production capacity and standby storage may be requested if adequate water use data is available to demonstrate that the actual average per customer maximum day demand is lower than that specified in the WA DOH Design Guidelines, and that conservation measures can be relied upon to limit new customers to this average water usage. Daily data collected over a two-year period is usually adequate, provided the summer months are typical of warm weather patterns.

The provision of standby storage is a recommendation (not a requirement) of the Design Guidelines. The amount of standby storage may be reduced below the recommended level in the Design Guidelines if "community expectations are amenable to a lesser standby storage capacity".

Pressurization of System

13. The operating cycle of any booster pump shall not exceed 6 cycles per hour.

14. The booster pumps shall have capacity to supply peak hour demand (PHD), preferably with the highest capacity pump out of service for reliability. The average day demand (ADD) shall be met with the largest capacity pump out of service.

15. The booster pumps shall have capacity to supply fire flow plus maximum day demand (MDD).

16. Hydropneumatic tanks shall be ASME approved (labeled) and equipped with a ASME relief valve. Small (up to 120 gallons), non-approved ASME tanks may be used if equipped with an ASME relief valve.

17. Hydropneumatic tanks shall be sized in accordance with WA DOH guidelines.

18. Back-up power shall be provided (i.e., emergency electrical generator) for systems dependent upon booster pumps as the sole source of supply. The electrical generator shall be operated by an automatic transfer switch, except where manual transfer may be completed in a reasonable time.

Treatment for Manganese & Iron

19. All iron and manganese facilities must be pilot plant tested at the site (or full scale tested after installation).

20. The maximum filter unit application rate and minimum backwash application rate shall be 5 gpm/sq.ft. and 12 gpm/sq.ft. unless otherwise approved by the WA Department of Health.

21. Documentation must be provided that the method of waste disposal [backwash] is acceptable to the WA Department of Ecology.

Chlorination

22. A WA DOH Hypochlorination Facilities for Small Systems submittal checklist shall be submitted where chlorination is provided.

Service Meters

23. Meters must be installed on all existing service connections by January 2017.

24. Meters must be installed on all new service connections beginning in January 2007.

VII. SYSTEM EVALUATION

The system evaluation is based on the design criteria given in Section VI. Calculations to support the evaluation are provided in the appendices. The major points in the system evaluation are summarized below:

Sources of Supply

The well production and water rights are adequate for the Town's 20-year planning period. Although the available production and water rights are adequate, water quality from the various sources is an issue for where to best obtain water from the Town's sources.

As recommended by the Town's hydrogeologist, the Town should continue the policy of using the Fort Casey well field as the lead source of supply and to develop additional sources of supply in the Smith Prairie area of Central Whidbey Island. This has the following advantages.

1. Withdrawing water from the wells in the north portion of the well field does not pose a risk for seawater intrusion. The full utilization of the Fort Casey source reduces the use of the In-Town Well Nos. 4 and 7 to summer high water demand periods, and the use of Well Nos. 1 and 6 to emergencies. This significantly reduces the present risk of seawater intrusion in the In-Town wells.

2. The In-Town wells have higher levels of electrical conductivity and total dissolved solids. These two parameters are classified as secondary, non-health related contaminants. However, they cause the water to be corrosive to copper piping. With the use of the Fort Casey source, the Town complies with the US EPA lead and copper rules, eliminating the need for chemical treatment of the water from the In-Town wells.

3. The In-Town wells (Well Nos. 4 and 7) and the new Keystone Hill well (Well No. 1-08) have arsenic levels of 0.080 to 0.090 mg/L, compared to the MCL of 0.010 mg/L. By utilizing the wells in the upper elevation portion of the Fort Casey well field plus the Keystone Hill well as the primary source of supply, after treatment to remove arsenic with iron at the Fort Casey treatment plant the arsenic level will be significantly reduced below the MCL.

The water from the wells in the lower elevation (southern) part of the Fort Casey well field (current operating wells) has high levels of manganese, hydrogen sulfide and iron and sulfate-reducing bacteria. The iron and sulfate-reducing bacteria, while not a health concern, causes increased operating cost for the treatment system to remove the manganese and hydrogen sulfide, and decreased well production. Once the Keystone Hill well is placed into service, the wells in the lower elevation portion of the Fort Casey well field should be removed from service.

The control of the wells is currently by a telemetry system installed in the 1970's. This system has a history of operating problems. For reliable well control, a new telemetry system should be installed.

Water Quality and Treatment

For removal of manganese, the Town previous capital plans included the installation of an oxidation and pressure filtration system in the In-Town treatment plant.

With increased production planned for the Fort Casey well field, it should only be necessary for the foreseeable future to use one of the In-Town wells during the summer peak water demand period. Therefore, only one of the two replacement treatment trains planned for the In-Town plant should be included in the long-range capital plan. Since increased supply will be obtained from the Fort Casey / Keystone Hill wells, the occasional use of an In-Town well will not introduce significant water with high levels of manganese to cause aesthetic problems. Therefore, the installation of treatment for the In-Town plant should be considered a low priority.

Storage, Pumping and Pressure Reduction

The volume of storage in the Sunset Terrace reservoirs, 1,000,000 gallons, is adequate. The amount of useable storage is reduced by the need to maintain storage level at the top one-third of the tanks in order to supply customers on Pennington Hill by gravity.

To increase the available volume of useable storage, and to provide higher pressure to the customers on Pennington Hill, the previous planned installation of a booster pump station and high elevation service area distribution mains should be included in the six-year capital budget.

The 500,000 gallon Engle Road reservoir was removed from service in 1998. Provisions should be made for abandoning the partly-buried reservoir in a manner that removes any safety concerns (i.e., demolishing the roof and filling the reservoir with dirt).

Pressure reduction is not necessary for areas other than the Fort Casey State Park, S.P.U. Campus and adjoining areas supplied by old steel and pit cast iron pipe. Once the old pipe is replaced in the Town's distribution system and within the customer's system, the Engle Road pressure reducing valve station could be deactivated.

Distribution

The design of the distribution system has not changed from the 1997 to 2002 *Water System Plan*.

The creation of a high elevation distribution system for Pennington Hill was noted above.

In addition, the emphasis should continue to be focused on a pay-as-you-go replacement program for the old steel and undersized water distribution mains. As funds are accumulated in the replacement reserve account, projects should be selected based on leak history, coordination with street paving programs and other utility projects.

Funding for projects to upgrade the distribution system should recognize the income from out-of-Town customers, and allocate project funding accordingly.

Network Analysis

The computer hydraulic analysis of the distribution system is provided in the Calculations section of this plan. Since the system has not significantly changed, the analysis results are provided for only the following:

- Peak hour demand condition
- 50% of PHD + 500 gpm fire flow at Sherman & Madrona

The above two results are provide to show adequate pressure to supply the proposed intertie for wholesale water to Sarkisian Springs.

VIII. RECOMMENDED IMPROVEMENTS

The short-term (6-year) and long term system improvements are shown in Appendix W and also summarized in the following Section IX.

IX. CAPITAL FACILITIES PLAN

The following table summarizes the capital improvements for this *Water System Plan*. All costs are in current-year dollars. Further details are included in Appendix W.

Table 10
Six-year Capital Facilities Plan

		Cost	Year
I	FACILITIES		
	A Wells		
	Purchase of well easement	$50,000	2010
	Ft. Casey emergency generator	$50,000	2012
	Keystone Hill raw water line	$425,000	2009
	Equip Well 1-08	$82,000	2009
	Rehabilitate Wells 4 & 7	$38,000	ongoing
	Rehabilitate Wells 1-90 & 1-06	$38,000	ongoing
	Storage building at Ft. Casey	$25,000	2010
	B Treatment		
	(no projects)		
	C Storage and pumping		
	Pennington Hill booster pump	$50,000	2009
	Earthquake valve Sunset Terrace Tank 1	$40,000	2009
	D Telemetry		
	Replace existing telemetry system	$80,000	2009
II	NEW WATER MAINS		
	A In-Town		
	Pennington pumped zone (Phase 1)	$18,000	2009
	B Out-of-Town		
	(no projects)		
III	WATER MAIN REPLACEMENT		
	A In-Town		
	Madrona Way (Phase 1)	$93,000	2009
	Fourth Street, Main to Kinney	$43,000	2009
	B Out-of-Town		
	(no projects)		
IV	MISCELLANEOUS		
	A Air release valves		
	Assumes 10 new installations at $1,000 each	$10,000	2010
	Assumes 5 replacements at $800 each	$4,000	2013
	B Water meters		
	1 Source meter testing and repairs/replacement	$12,000	over
	2 Large meter testing and repairs/replacement	$12,000	six
	3 Small meter replacement	$24,000	years
	Total	$1,094,000	

X. FINANCES

A financial viability assessment, developed in accordance with the Washington Department of Health Financial Viability Manual, March 1995, is provided in the Appendix W.

Funding for the operation of the water system is obtained from the water rates and charges (copy in Appendix X).

The current financial plan assumes that all future water system improvements will be financed on a pay-as-you-go basis with the exception equipping and connection of Well No. 1-08. The surplus funds from the previous year (revenues minus operating expenses) are allocated to a capital reserve fund.

The revenue from hook-up fees is dedicated to the capital reserve fund.

XI. OPERATION AND MAINTENANCE

Details on the following operation programs and plans are included in appendices and in the M. & O. Manual.

Appendix M, Water Conservation Plan
Appendix N, Water Shortage Response Plan
Appendix O, Cross Connection Control Program
Appendix P, Wellhead Protection Program
Appendix Q, Water Quality Monitoring Plan
Appendix R, Emergency Plan
Appendix S, Corrosion Control Plan
Appendix T, Seawater Mitigation Plan
Appendix U, Maintenance Program
Appendix V, Safety Program

The following status reports on the implementation and operation of the above noted programs and plans are provided.

Cross Connection Control Program

All elements for initiation of the program have been competed.

Water Conservation Plan

The water conservation plan education component has been completed. Continued emphasis on the need for conservation should be a high priority to ensure that the MDD remains well below the 474 gpd/ERU used for calculating the allowable number of customers that can be supplied.

The 2008 distribution system leakage (DSL) was less than 10 percent of production.

Water Shortage Response Plan

The water shortage response plan has not been needed. No modifications to the plan were necessary. With the increased production from the new Out-of-Town sources, the likelihood of needing to implement the plan has been significantly reduced.

Wellhead Protection Program

The task to refine the delineation of the wellhead protection areas from the fixed radius method assumed initially has not been scheduled. With the increased use of the Out-of-Town source of supply, this task is not needed for the foreseeable future.

Water Quality Monitoring Plan

The Town is on schedule for sampling for inorganic chemicals, volatile organic compounds, disinfection byproduct monitoring, etc.

Emergency Plan

It has not been necessary to implement the emergency plan. The primary effort in emergency planning for the water system has been the periodic testing of the operation of the emergency generators and emergency sources of supply (Well Nos. 1 and 6).

Corrosion Control Plan

Through increase use of Out-of-Town wells to blend water with the In-Town wells, the Town is in compliance with the Lead and Copper Rule.

Seawater Mitigation Plan

The Town has a good monitoring record of static and pumping water levels and chloride levels. Although the In-Town wells are assessed by the County as being at high risk of seawater intrusion, the level of chloride has remained below 100 mg/L.

Maintenance Program

As shown in the table of tasks in Appendix U, the Town needs to increase its maintenance budget maintenance of blow-off assemblies, air release valve assemblies and testing of commercial (large revenue producing) meters. The financial viability assessment in Appendix W shows an increase in the maintenance budget starting in 2010.

Safety Program

The Town schedules weekly scheduled "tailgate" safety meetings.

XII. STANDARD SPECIFICATIONS - WATER MAIN

For any future extension or replacement of water mains, the Appendix L includes standard plans and specifications for water mains 2 to 12-inch in diameter.

CALCULATIONS

ALLOWABLE NUMBER OF CONNECTIONS (ERUs)

Summary of System Information:

Water rights:	GWC-880 D	Well No. 1	250	gpm	26	acre-feet
	GWC 1174-A	Well No. 2	150	gpm	42	acre-feet
	GWC 5618-A	Ft. Casey	150	gpm	158	acre-feet
	GWP 7689	Ft. Casey	0	gpm	82	acre-feet
	G1-20378C	Well No. 4	210	gpm	190	acre-feet
	G1-20359C	Well No. 7	210	gpm	190	acre-feet
			970	gpm	688	acre-feet

Well production:	Well No. 4	210	gpm
(March 2009)	Well No. 7	210	gpm
	Ft. Casey	157	gpm
		577	gpm

Storage

Sunset Terrance No. 1	500,000	gallons (nominal)
Sunset Terrance No. 2	500,000	gallons (nominal)
In-Town WTP	50,000	gallons (nominal), 50% currently in use.
Ft. Casey WTP	105,000	gallons (nominal), excludes raw water tank
	1,155,000	gallons (nominal)

Recorded MDD with conservatior	359	gpd/ERU	1992 water use survey
Design MDD with conservation	474	gpd/ERU	1992 MDD & 30%+ S.F.
MDD without conservation:	800	gpd/ERU	assumed without recorded MDD

WA DOH authorized number of connections: 1,385 ERUs 2/1/2008 Letter

The following is a summary of the calculated number of equivalent single-family residential connections (ERUs) that the system may supply, based on various design criteria.

Also see Water Supply and Demand Forecast

Water Rights:

1,746 ERUs Based on the current water right rate of production, assuming 800 gpd/ERU Maximum Day Demand (no water conservation).

2,947 ERUs Based on the current water right rate of production, assuming design MDD of 474 gpd/ERU

2,293 ERUs Based on the current water right annual withdrawal, assuming 0.3 acre-feet/ERU (WA DOE allocation for Island County)

Well Production:

1,753 ERUs Based on the current pumping rate, assuming design MDD. and 4% Ft. Casey water treatment plant waste

Water Treatment:

1,738 ERUs Based on current well production, minus waste for backwash of filters at the Ft. Casey Water Treatment Plant.

Water Storage:

1,830 ERUs Based on current nominal storage, assuming design MDD for standby storage and calculation of PHD, reduction for operating and dead storage, allowance for filter backwash, current well production.

RESERVOIR SIZING

Allowable number of connections based on existing reservoir, design MDD (474 gpd/ERU), current well production, allowance for water used to backwash Ft. Casey WTP filters, and criteria in the WA DOH August 2001 "Water System Design Guidelines".

Allowable number of service connections:			**1,830**	
Number of wells (sources):			**3**	
Well production capacities (current):			**577**	gpm
Peak Hour Demand (PHD):			1,056	gpm
Maximum Day Demand (MDD) based on	**474**	gpd/ERU	867,420	gal/day
Required minimum continuous well production			602	gpm (avg)
Minimum standby storage based on MDD **474** gal/connection [D.O.H.]			867,420	gal
Credit for multiple well source **577** gpm (Well Nos. 1 & 6 > Well No. 4)		less	830,880	gal
Equalizing storage: whenever source pumping capacity cannot meet peak demands [D.O.H.]			71,829	gal
E.S. = (PHD-Q)(150) Q = source production in gpm				
Added for fire storage (1,500 gpm for 60 minutes) for commercial customers.			53,460	gal
Add min. standby storage based on	**200**	gpd/ERU	276,000	gal
Total required storage		[1+2+3]	437,829	gal
Allowance for filter backwash (Ft, Casey WTP)		add	7,200	gal
Allowance for operating and dead storage		add	674,101	gal
TOTAL			1,119,130	gal

Current storage	Nominal	Dead	Operating
Sunset Terrance Nos. 1 & 2	1,000,000	646,154	15,385
In-Town WTP	25,000	1,563	3,125
Ft. Casey WTP	105,000	2,625	5,250
	1,130,000	650,341	23,760

Note: Standby (emergency) storage in the amount equal to one maximum day demand (MDD) is now a recommendation of WA DOH Design Guidelines (no longer a requirement). Less than 800 gpd/ERU MDD may be provided if the "community expectations are amenable to a lesser standby storage capacity".

PEAK HOUR DEMAND (PHD) AND AVERAGE MAXIMUM DAY DEMAND (MDD)

Based on Recorded Maximum Day Demand (MDD)

1992	345,000	gpd	Jul 30
1993	256,000	gpd	Sep 30
1994	342,000	gpd	Jul 20
1995	356,000	gpd	Jun 30
1996	337,000	gpd	Jul 23
1997	388,000	gpd	Jun 23
1998	395,000	gpd	Aug 6
1999	347,000	gpd	
2000	403,000	gpd	Jul 14
2001	343,200	gpd	Aug 11
2002	402,000	gpd	Aug 15
2003	430,000	gpd	Aug 1
2004	**471,914**	gpd	**Jul 29**
2005	438,000	gpd	Aug 10
2006	462,832	gpd	Jun 5
2007		gpd	
2008		gpd	

Average MDD, based on July 29, 2004	328	gpm		
PHD based on average MDD x 2.5	819	gpm	0.82	gpm/ERU

	ERUs	PHD (gpm)
For demand distribution, equivalent ERUs / PHD, based on 474 gpd/ERU and recorded MDD	996	819
Additional ERUs sold or committed (e.g., new subdivision)	290	239
Shot-term growth allowance	100	82
Total	1,386	1,140

DISTRIBUTION OF DEMAND

NODE	ERUs	Demand (gpm)	
5	40	33	SF
11	20	16	C
13	25	20	MF
22	50	41	SF
26	50	41	C
27	35	28	C
28	50	41	C
29	20	16	MF
31	50	41	C
33	30	24	MF
35	20	17	SF
42	40	33	SF
46	10	8	SF
50	20	17	C
53	15	12	MF
60	30	24	SF
61	20	16	SF
66	40	33	SF
71	40	33	SF
74	40	33	SF
77	20	17	SF
102	45	37	MF
103	10	8	SF
111	10	8	C
112	20	17	MF
113	70	57	C
119	50	41	SF
122	45	37	C
127	10	8	C
131	50	41	SF
141	20	17	C
142	10	8	SF
145	20	17	MF
149	20	17	MF
151	20	17	MF
152	10	8	SF
154	10	8	MF
156	10	8	SF
157	45	41	SF
164	20	17	SF
168	10	8	SF
170	10	8	SF

NODE	ERUs	Demand (gpm)	
205	13	10	SF
235	15	12	C
236	8	6	C
237	2	3	C
253	15	12	SF
263	7	6	SF
285	24	20	SF
287	2	3	SF
289	3	3	SF
290	3	3	SF
307	37	34	SF
309	5	4	C
311	10	8	SF
312	9	7	SF
313	8	6	SF
314	3	3	SF
317	3	3	SF
318	10	5	SF
321	15	7	Wholesale SF
403	7	6	SF
406	5	4	SF
407	2	3	SF
total	1,386	1,140	

Code 5

SF Accounts Out-of-Town	ERUs	Node	
Ft. Casey Road	24	285	
Burchell	2	287	
Terry E & Henry Loop & SR20	3	289	
	3	290	
Engle Rd	13	205	
Cathedral & Hill	15	253	
Ebey	7	263	
Madrona	37	307	
	10	311	
320 N	8	313	
Capt Whidbey Inn Rd	9	312	
Sherman & Wind Dancer	25	321	Includes wholesale supply to
Vine	3	314	Sarkisian Springs (15 ERUs)
Black	3	317	
Parker Road	7	403	
Rosewood / Crown	5	406	
Indian Hill	2	407	
Total	176		

Code 1

SF Accounts In-Town	ERUs	Node
Parker/Town Limits	40	66
Parker/Moore	20	61
9th/Otis	40	71
Leisure/Lovejoy	30	60
Leach/Linsay	20	50
Summit	20	35
Pennington	40	5
Pennington	40	42
Faris N.	10	46
9th/Gould	50	22
6th/Kinney	50	131
4th/Clapp	50	119
6th/ ---	40	74
	20	76
Front	10	142
Glenwood	10	152
Kruger N.	10	156
Broadway/Snomont	45	157
Bakerview	10	168
Oakmont	10	170
Madrona/Vine	20	164
Baibridge	10	103
Total	595	

Commercial/MF	ERUs		Node
Parker/Lindsay	15	MF	53
Front	20	MF	145
N. Main/Front	20	C	141
N. Main	20	C	11
Center	10	C	127
5th	45	C	122
Gould (Careage)	50	C	26
N. Main	25	MF	13
S.Main (E. School)	35	C	27
S. Main	50	C	28
S. Main	20	MF	29
S. Main (H. School	50	C	31
S. Main (MHP)	30	MF	33
Terry (MHP)	45	MF	102
N. Main (Hospital)	70	C	113
Kruger S.	10	MF	154
6th/Alexander	20	MF	149
6th/Glenwood	20	MF	151
Capt Whidbey Inn	5	C	309
SPU Campus	15	C	235
State Park	8	C	236
Ferry	2	C	237
Birch	10	C	111
Ist	20	MF	112
Total	615		

File: J171A1

NETWORK ANALYSIS - COMPUTER PROGRAM DATA

Initial Input - March 2008 System, Peak Hour Demand for 1,386 ERUs

Program Input Codes:

0	1	0.001	1			
2	1	5	1	1	1	1
237	208					

Pipe Data:

Pipe No.	Between Nodes		Length (feet)	Diameter Diameter (inches)	H-W H-W Coefficient
1	1	2	300	12	140.1
2	2	3	370	8	120
3	3	4	600	8	140
4	4	5	640	8	140
5	5	6	500	10	140
6	6	7	600	10	140
7	7	78	340	10	140
8	8	9	1000	10	140
9	9	10	800	10	140
10	10	11	400	10	140
11	11	12	820	10	140
12	12	13	430	10	140
13	13	14	270	10	140
14	14	15	260	10	140
15	15	16	300	10	140
16	*16*	*17*	*530*	*10*	*140*
17	*17*	*18*	*170*	*10*	*140*
18	17	18	530	10	140
19	19	20	250	10	140
20	20	21	300	10	140
21	21	22	280	10	140
22	23	22	830	10	140
23	24	23	530	10	140
24	25	24	250	10	140
25	26	25	500	10	140
26	8	26	400	10	140
27	10	27	150	12	140.1
28	27	28	630	12	140
29	28	29	510	12	140
30	29	30	510	12	140
31	30	31	150	12	140
32	31	32	350	12	140
33	32	33	970	12	140
34	3	34	450	8	120
35	34	35	450	4	120
36	35	5	640	4	120

Assumed H-W Coefficients

140	PVC & Lined DI pipe
120	Asbestos cement pipe
100	Unlined CI, Galv Stl or unknown

Note:
H-W Coefficient pipe codes

140.1	*Ductile Iron*
100.1	*Pit Cast Iron (1928)*

Initial Input (continued) 2

Pipe Data:

Pipe No.	Between Nodes		Length (feet)	Diameter Diameter (inches)	H-W H-W Coefficient
37	2	36	100	12	140.1
38	36	37	270	12	120
39	37	38	350	6	140
40	37	39	740	12	120
41	39	40	100	6	120
42	40	41	400	4	140
43	40	42	650	6	120
44	42	43	470	6	120
45	43	44	550	4	120
46	44	45	440	4	120
47	45	46	230	4	120
48	42	47	175	6	140
49	47	48	100	4	140
50	47	49	490	6	140
51	49	50	75	6	140
52	50	51	400	4	120
53	49	52	260	6	140
54	52	51	230	6	140
55	51	53	75	4	100.1
56	53	54	320	8	140
57	54	55	220	6	140
58	54	56	620	8	140
59	56	57	460	8	140
60	57	58	1060	6	120
61	58	59	420	8	140
62	58	60	480	8	140
63	59	60	350	8	140
64	57	61	1160	8	140
65	61	62	310	4	100
66	61	63	1000	8	140
67	63	64	360	8	140
68	64	65	1280	8	140
69	65	66	300	6	140
70	53	67	220	8	140
71	67	68	200	2	100
72	67	69	260	8	140
73	69	71	240	8	140
74	71	22	670	8	140
75	70	69	970	4	120
76	72	71	800	6	140
77	43	70	270	6	120
78	70	72	420	6	120

Initial Input (continued) 3

Pipe Data:

Pipe No.	Between Nodes		Length (feet)	Diameter Diameter (inches)	H-W H-W Coefficient
79	72	73	200	1	140
80	72	74	350	6	120
81	74	23	330	6	120
82	74	75	540	6	140
83	44	75	550	6	140
84	77	78	520	6	140
85	76	77	330	6	140
86	75	76	250	6	140
87	24	75	350	8	140
88	25	76	350	8	140
89	78	8	560	10	140
90	7	79	440	6	140
92	32	281	970	8	140.1
93	31	101	560	8	140.1
101	30	101	740	6	140
102	101	102	300	8	140
103	32	103	390	6	140
111	10	111	760	6	140
112	11	112	440	8	140
113	9	113	520	10	140
114	113	114	550	8	140
115	114	12	200	8	100
116	114	115	150	4	100
117	115	116	220	4	100
118	116	117	330	4	100
119	117	25	530	6	140
120	117	118	230	4	140
121	118	119	270	4	140
122	119	120	270	2	100
123	120	121	370	4	120
124	121	122	300	6	120
125	123	122	350	8	140.1
126	125	126	300	4	120
127	125	124	270	4	100
128	13	124	270	4	100
129	123	124	220	6	140
130	14	123	310	8	140.1
131	123	127	220	6	140
132	16	128	300	6	140
133	128	129	230	6	140
134	126	129	500	4	120
135	129	130	250	6	140
136	129	21	1000	6	140

Initial Input (continued) 4

Pipe Data:

Pipe No.	Between Nodes		Length (feet)	Diameter Diameter (inches)	H-W H-W Coefficient
137	121	131	190	6	120
138	23	131	540	6	120
139	116	125	190	4	100
141	18	141	180	10	140
142	141	142	500	6	140
143	20	142	450	6	140
144	141	143	350	6	140
145	143	144	230	6	140
146	144	145	310	6	140
147	146	144	330	6	140
148	18	146	560	6	120
149	147	146	550	6	120
150	148	147	290	6	120
151	149	148	200	6	120
152	15	149	520	6	120
153	148	150	440	8	140
154	150	151	290	8	140
155	151	152	200	4	140
156	151	153	400	8	140
157	153	154	300	6	140
158	153	155	320	8	140
159	155	157	375	8	140
160	155	156	450	6	140
161	157	158	540	8	140
162	159	158	260	6	120
163	160	159	550	6	120
164	160	161	200	1	100
165	162	160	175	6	120
166	146	162	450	8	140
167	158	163	500	4	120
168	157	165	610	8	140
169	165	166	540	8	140
170	166	167	200	6	140
171	166	168	200	4	140
172	165	169	710	8	140
173	169	170	340	6	140
174	163	164	740	4	120
175	112	171	400	8	140.1
176	171	172	375	8	140.1
177	171	173	640	8	140.1
178	173	150	550	8	140.1
201	33	201	2970	8	140

Initial Input (continued) 5

Pipe Data:

Pipe No.	Between Nodes		Length (feet)	Diameter Diameter (inches)	H-W H-W Coefficient
202	201	202	2940	8	140
203	202	203	2780	8	140
204	203	204	850	8	140
205	204	205	2130	8	140
206	205	206	1000	8	140
207	206	207	550	8	140
208	207	208	1800	8	140
209	208	209	1030	8	140
210	209	210	700	8	140
211	210	211	2550	8	140
212	211	212	1680	8	140
213	212	213	1800	8	140
214	213	214	540	8	140
215	215	214	20	6	140
216	216	215	80	8	140.2
231	206	231	20	4	140.2
232	231	232	380	6	140
233	232	233	840	4	100.1
234	233	234	640	6	100.1
235	234	235	1400	4	100.1
236	235	236	1900	4	100.1
237	236	237	900	4	100.1
251	203	251	1080	4	120
252	251	252	1100	4	120
253	252	253	1350	4	120
261	102	261	600	8	140
262	261	262	1300	4	140
263	262	263	650	4	140
264	261	264	1470	8	140
265	264	265	250	8	140
266	265	266	280	8	140
267	266	267	500	1	100
268	266	169	530	8	140
280	30	281	700	8	140.1
281	281	282	1970	3	120
282	282	283	780	3	120
283	283	284	540	2	100
284	283	285	2200	3	120
285	285	286	1500	2	100
286	286	287	1240	1	100
287	282	288	570	4	140
288	288	289	480	1	100

Initial Input (continued) *6*

Pipe Data:

Pipe No.	Between Nodes		Length (feet)	Diameter Diameter (inches)	H-W H-W Coefficient	
289	288	290	450	1	100	
301	164	301	570	4	120	
302	301	302	1050	4	100	
303	302	303	100	8	140	
304	303	304	1355	8	140	
305	304	305	1540	8	140	
306	305	306	3230	4	100	
307	306	307	920	4	100	
308	307	308	1590	4	100	
309	308	309	320	4	100	
310	309	310	950	4	100	
311	310	311	1350	2	140	
312	309	312	1350	4	100	
313	308	313	720	2	100	
314	170	314	1050	6	140	
315	314	315	720	6	140	
316	315	316	750	6	140	
317	316	317	700	6	140	
318	317	318	480	6	140	
319	318	319	10	4	120	
320	319	320	460	4	120	
321	320	303	590	4	120	
322	314	164	1480	4	120	
323	317	321	1100	6	140	
401	66	401	300	6	140	
402	401	402	1100	6	140	
403	402	403	1090	6	140	
404	401	404	470	4	140	
405	404	405	150	4	140	
406	405	406	220	4	140	
407	404	407	1000	4	140	
901	320	901	475	8	140.3	Proposed

Initial Input (continued) 7

Node Data:

Node No.	Demand (gpm)	Elevation (feet)	Notes:
1	0	230	RESERVOIR
2	0	230	
3	0	220	
4	0	215	
5	33	210	
6	0	165	
7	0	120	
8	0	100	
9	0	115	
10	0	100	
11	16	100	
12	0	145	
13	20	120	
14	0	110	
15	0	105	
16	0	85	
17	0	70	
18	0	50	
19	0	55	
20	0	45	
21	0	30	
22	41	25	
23	0	45	
24	0	80	
25	0	105	
26	41	120	
27	28	100	
28	41	100	
29	16	100	
30	0	95	
31	41	95	
32	0	90	
33	24	90	
34	0	215	
35	17	215	
36	0	220	
37	0	205	
38	0	195	
39	0	170	
40	0	130	
41	0	125	
42	33	115	

Initial Input (continued) *8*

Node Data:

Node No.	Demand (gpm)	Elevation (feet)	Notes:
43	0	105	
44	0	115	
45	0	165	
46	8	160	
47	0	105	
48	0	100	
49	0	65	
50	17	55	
51	0	45	
52	0	55	
53	12	35	
54	0	40	
55	0	40	
56	0	95	
57	0	100	
58	0	75	
59	0	65	
60	24	55	
61	16	125	
62	0	90	
63	0	200	
64	0	205	
65	0	205	
66	33	200	
67	0	30	
68	0	35	
69	0	25	
70	0	90	
71	33	25	
72	0	65	
73	0	85	
74	33	60	
75	0	80	
76	0	80	
77	17	145	
78	0	115	
79	0	120	
101	0	100	
102	37	100	
103	8	90	
111	8	100	
112	17	100	

Initial Input (continued) *9*

Node Data:

Node No.	Demand (gpm)	Elevation (feet)	Notes:
113	57	130	
114	0	155	
115	0	140	
116	0	140	
117	0	125	
118	0	105	
119	41	85	
120	0	75	
121	0	85	
122	37	100	
123	0	110	
124	0	120	
125	0	115	
126	0	80	
127	8	100	
128	0	80	
129	0	70	
130	0	60	
131	41	75	
141	17	35	
142	8	40	
143	0	20	
144	0	15	
145	17	25	
146	0	35	
147	0	55	
148	0	75	
149	17	90	
150	0	85	
151	17	85	
152	8	80	
153	0	85	
154	8	90	
155	0	80	
156	8	80	
157	41	105	
158	0	120	
159	0	105	
160	0	75	
161	0	65	
162	0	40	
163	0	130	

Initial Input (continued) *10*

Node Data:

Node No.	Demand (gpm)	Elevation (feet)	Notes:
164	17	120	
165	0	125	
166	0	130	
167	0	135	
168	8	135	
169	0	100	
170	8	130	
171	0	125	
172	0	125	
173	0	110	
201	0	100	
202	0	160	
203	0	180	
204	0	160	
205	10	100	
206	0	60	
207	0	40	
208	0	55	
209	0	45	
210	0	25	
211	0	30	
212	0	50	
213	0	20	
214	0	35	
215	0	35	
216	0	35	
231	0	60	
232	0	80	
233	0	40	
234	0	20	
235	12	20	
236	6	20	
237	3	10	
251	0	150	
252	0	140	
253	12	130	
261	0	110	
262	0	100	
263	6	95	
264	0	120	
265	0	120	
266	0	120	

Initial Input (continued) *11*

Node Data:

Node No.	Demand (gpm)	Elevation (feet)	Notes:
267	0	120	
281	0	115	
282	0	115	
283	0	105	
284	0	105	
285	20	120	
286	0	100	
287	3	160	
288	0	145	
289	3	175	
290	3	175	
301	0	100	
302	0	80	
303	0	80	
304	0	100	
305	0	100	
306	0	60	
307	34	60	
308	0	35	
309	4	35	
310	0	10	
311	8	10	
312	7	10	
313	6	10	
314	3	120	
315	0	110	
316	0	120	
317	3	170	
318	5	150	
319	0	150	
320	0	148	
321	7	202	
401	0	190	
402	0	140	
403	6	100	
404	0	180	
405	0	180	
406	4	190	
407	3	100	
901	0	127	
Total	1,140		

Initial Input (continued) 12

Program Input Codes:

2	1	1	0	0
3				

Source Pump Data:

Reservoirs					
	1	1	0.9		Node No.; No. of Pumps, Initial portion of flow
Sunset		0	1000	2000	Flow (gpm)
Terrace		60	60	60	Head (feet), height of water in reservoir (64' full)
	216	1	0.1		Node No.; No. of Pumps, Initial portion of flow
Ft. Casey		0	500	1000	Flow (gpm)
WTP		10	10	10	Head (feet), height of water in reservoir (19' full)
Booster or Transfer Pumps					
	215	1			Pipe No.; No. of Pumps
Ft. Casey		0	250	350	Flow (gpm)
WTP		350	305	225	Head (feet), pump curve, PACO 30 hp
	not coded	1			Pipe No.; No. of Pumps
Pennington		0	100	150	Flow (gpm)
Hill (Future)		132	115	82	Head (feet), pump curve, Gould 3656 5 hp
Pressure Reducing Valve Station					
Engle Rd.	231	0	108	0	Pipe No.; Source code; Downstream HGL; "K"

Distribution System Inventory:

			Length (feet)			
Diameter	Ductile iron	PVC	Asbestos Cement	Cast Iron (pit cast)	Galv Steel or unknown	Total
12" Ø	4,680	0	0	0	0	4,680
10" Ø	0	11,550	0	0	0	11,550
8" Ø	4,855	45,190	900	0	200	51,145
6" Ø	0	20,320	7,785	640	0	28,745
4" Ø	0	5,760	12,750	5,115	11,150	34,775
3" Ø	0	0	7,650	0	0	7,650
2" Ø & less			All assumed as glued-joint PVC or Galv Steel			4,950
Sub Total	9,535	82,820	29,085	5,755	11,350	143,495
		58%	20%	4%	8%	27 miles

[a]

NETWORK ANALYSIS

Peak Hour Demand for 1,386 ERUs

Operating parameters:

Supply only from Sunset Terrace Reservoirs (In-Town and Ft. Casey WTPs not pumping)
Sunset Terrace Reservoir at 60 foot level (down 5 feet)

Source Reservoirs:

Node No.	No. of Pumps	Elev. of Pumps	ws and Related Heads (height of water in reservoir) 0	1000	2000	
1	1	230	60	60	60	Sunset Terrace

Booster Pumps:

Pipe No.	No. of Pumps	Pumps Flows and Related Heads (pump curve)

None operating

Pressure Reducing Valves:

PRV No.	Pipe No.	Ref. Node	Downstream HGL	K-value	CV feature	
1	33	101	225	0	YES	Engle Road

Pipe Flows:

Pipe Dia. (inches)	Upstrm. Node	Dnstrm. Node	Pipe No.	Flow (gpm)	Head loss (feet)	Velocity (fps)	Upstrm. HGL (feet)
12	1	2	1	1140.0	0.9	3.2	290.0
8	2	3	2	725.1	4.3	4.6	289.2
8	3	4	3	623.7	4.0	4.0	284.8
8	4	5	4	623.7	4.3	4.0	280.8
10	5	6	5	675.1	1.3	2.8	276.5
10	6	7	6	675.1	1.6	2.8	275.2
10	7	78	7	675.1	0.9	2.8	273.7
10	8	9	8	404.2	1.0	1.7	271.8
10	9	10	9	263.3	0.4	1.1	270.8
10	10	11	10	-47.2	0.0	-0.2	270.4
10	11	12	11	-132.2	-0.1	-0.5	270.4
10	12	13	12	-29.1	0.0	-0.1	270.5
10	13	14	13	-42.5	0.0	-0.2	270.5
10	14	15	14	-5.8	0.0	0.0	270.5
10	15	16	15	-58.5	0.0	-0.2	270.5
10	16	17	16	14.1	0.0	0.1	270.5
10	17	18	17	9.2	0.0	0.0	270.5
10	17	18	18	5.0	0.0	0.0	270.5
10	19	20	19	0.0	0.0	0.0	271.4
10	20	21	20	-102.7	0.0	-0.4	271.4

Peak Hour Demand for 1,386 ERUs

Pipe Flows:

Pipe Dia. (inches)	Upstrm. Node	Dnstrm. Node	Pipe No.	Flow (gpm)	Head loss (feet)	Velocity (fps)	Upstrm. HGL (feet)
10	21	22	21	-182.4	-0.1	-0.8	271.4
10	23	22	22	115.7	0.1	0.5	271.6
10	24	23	23	168.5	0.1	0.7	271.7
10	25	24	24	103.296	0.02	0.42	271.67
10	26	25	25	105.307	0.04	0.43	271.72
10	8	26	26	146.307	0.06	0.6	271.78
12	10	27	27	302.5	0.0	0.9	270.4
12	27	28	28	274.5	0.1	0.8	270.4
12	28	29	29	233.5	0.1	0.7	270.2
12	29	30	30	217.5	0.1	0.6	270.2
12	30	31	31	163.5	0.0	0.5	270.1
12	31	32	32	73.3	0.0	0.2	270.1
12	32	33	33	67.0	0.0	0.2	270.1
8	3	34	34	101.4	0.1	0.7	284.8
4	34	35	35	101.4	4.0	2.6	284.7
4	35	5	36	84.4	4.1	2.2	280.6
12	2	36	37	414.9	0.0	1.2	289.2
12	36	37	38	414.9	0.2	1.2	289.1
6	37	38	39	0.0	0.0	0.0	289.0
12	37	39	40	414.9	0.4	1.2	289.0
6	39	40	41	414.9	1.7	4.7	288.5
4	40	41	42	0.0	0.0	0.0	286.8
6	40	42	43	414.9	11.0	4.7	286.8
6	42	43	44	214.6	2.4	2.4	275.8
4	43	44	45	55.9	1.6	1.4	273.5
4	44	45	46	8.0	0.0	0.2	271.8
4	45	46	47	8.0	0.0	0.2	271.8
6	42	47	48	167.3	0.4	1.9	275.8
4	47	48	49	0.0	0.0	0.0	275.4
6	47	49	50	167.3	1.2	1.9	275.4
6	49	50	51	53.7	0.0	0.6	274.2
4	50	51	52	36.7	0.6	0.9	274.2
6	49	52	53	113.7	0.3	1.3	274.2
6	52	51	54	113.7	0.3	1.3	273.9
4	51	53	55	150.3	2.0	3.8	273.7
8	53	54	56	86.0	0.1	0.6	271.7
6	54	55	57	0.0	0.0	0.0	271.7
8	54	56	58	86.0	0.1	0.6	271.7
8	56	57	59	86.0	0.1	0.6	271.6
6	57	58	60	24.0	0.1	0.3	271.5
8	58	59	61	10.5	0.0	0.1	271.4
8	58	60	62	13.5	0.0	0.1	271.4

Peak Hour Demand for 1,386 ERUs

Pipe Flows:

Pipe Dia. (inches)	Upstrm. Node	Dnstrm. Node	Pipe No.	Flow (gpm)	Head loss (feet)	Velocity (fps)	Upstrm. HGL (feet)
8	59	60	63	10.5	0.0	0.1	271.4
8	57	61	64	62.0	0.1	0.4	271.5
4	61	62	65	0.0	0.0	0.0	271.4
8	61	63	66	46.0	0.1	0.3	271.4
8	63	64	67	46.0	0.0	0.3	271.3
8	64	65	68	46.0	0.1	0.3	271.3
6	65	66	69	46.0	0.1	0.5	271.2
8	53	67	70	52.3	0.0	0.3	271.7
2	67	68	71	0.0	0.0	0.0	271.7
8	67	69	72	52.3	0.0	0.3	271.7
8	69	71	73	84.027	0.04	0.54	271.68
8	71	22	74	107.737	0.17	0.69	271.64
4	70	69	75	31.684	1.01	0.81	272.69
6	72	71	76	56.7	0.3	0.6	271.9
6	43	70	77	158.7	0.8	1.8	273.5
6	70	72	78	127.0	0.8	1.4	272.7
1	72	73	79	0.0	0.0	0.0	271.9
6	72	74	80	70.3	0.2	0.8	271.9
6	74	23	81	53.3	0.1	0.6	271.7
6	74	75	82	-16.0	0.0	-0.2	271.7
6	44	75	83	47.9	0.1	0.5	271.8
6	77	78	84	-124.6	-0.7	-1.4	272.1
6	76	77	85	-107.6	-0.4	-1.2	271.7
6	75	76	86	-33.3	0.0	-0.4	271.7
8	24	75	87	-65.2	0.0	-0.4	271.7
8	25	76	88	-74.2	-0.1	-0.5	271.7
10	78	8	89	550.5	1.0	2.3	272.8
6	7	79	90	0.0	0.0	0.0	273.7
8	32	281	92	-1.7	0.0	0.0	270.1
8	31	101	93	49.2	0.0	0.3	270.1
6	30	101	101	23.3	0.1	0.3	270.1
8	101	102	102	72.5	0.0	0.5	270.1
6	32	103	103	8.0	0.0	0.1	270.1
6	10	111	111	8.0	0.0	0.1	270.4
8	11	112	112	69.0	0.1	0.4	270.4
10	9	113	113	140.9	0.1	0.6	270.8
8	113	114	114	83.9	0.1	0.5	270.7
8	114	12	115	103.1	0.1	0.7	270.6
4	114	115	116	-19.2	-0.1	-0.5	270.6
4	115	116	117	-19.2	-0.1	-0.5	270.7
4	116	117	118	-34.4	-0.6	-0.9	270.8
6	117	25	119	-76.3	-0.3	-0.9	271.4

Peak Hour Demand for 1,386 ERUs 4

Pipe Flows:

Pipe Dia. (inches)	Upstrm. Node	Dnstrm. Node	Pipe No.	Flow (gpm)	Head loss (feet)	Velocity (fps)	Upstrm. HGL (feet)
4	117	118	120	41.8	0.3	1.1	271.4
4	118	119	121	41.8	0.4	1.1	271.1
2	119	120	122	0.8	0.0	0.1	270.7
4	120	121	123	0.8	0.0	0.0	270.7
6	121	122	124	66.0	0.2	0.8	270.7
8	123	122	125	-29.0	0.0	-0.2	270.5
4	125	126	126	-7.1	0.0	-0.2	270.8
4	125	124	127	22.3	0.2	0.6	270.8
4	13	124	128	-6.6	0.0	-0.2	270.5
6	123	124	129	-15.7	0.0	-0.2	270.5
8	14	123	130	-36.7	0.0	-0.2	270.5
6	123	127	131	8.0	0.0	0.1	270.5
6	16	128	132	-72.6	-0.2	-0.8	270.5
6	128	129.0	133.0	-72.6	-0.1	-0.8	270.7
4	126	129.0	134.0	-7.1	0.0	-0.2	270.8
6	129	130	135	0.0	0.0	0.0	270.8
6	129	21	136	-79.7	-0.6	-0.9	270.8
6	121	131	137	-65.116	-0.1	-0.74	270.71
6	23	131	138	106.116	0.73	1.2	271.55
4	116	125	139	15.215	0.07	0.39	270.82
10	18	141	141	-31.3	0.0	-0.1	270.5
6	141	142	142	-94.7	-0.4	-1.1	270.5
6	20	142	143	102.7	0.4	1.2	271.4
6	141	143	144	46.4	0.1	0.5	270.5
6	143	144	145	46.4	0.1	0.5	270.5
6	144	145	146	17.0	0.0	0.2	270.4
6	146	144	147	-29.4	0.0	-0.3	270.4
6	18	146	148	45.4	0.2	0.5	270.5
6	147	146	149	-25.1	-0.1	-0.3	270.3
6	148	147	150	-25.1	0.0	-0.3	270.3
6	149	148	151	35.7	0.0	0.4	270.3
6	15	149	152	52.7	0.2	0.6	270.5
8	148	150	153	60.7	0.0	0.4	270.3
8	150	151	154	112.7	0.1	0.7	270.3
4	151	152	155	8.0	0.0	0.2	270.2
8	151	153	156	87.7	0.1	0.6	270.2
6	153	154	157	8.0	0.0	0.1	270.1
8	153	155	158	79.7	0.1	0.5	270.1
8	155	157	159	71.7	0.1	0.5	270.1
6	155	156	160	8.0	0.0	0.1	270.1
8	157	158	161	-21.4	0.0	-0.1	270.0
6	159	158	162	49.7	0.1	0.6	270.1

Peak Hour Demand for 1,386 ERUs

Pipe Flows:

Pipe Dia. (inches)	Upstrm. Node	Dnstrm. Node	Pipe No.	Flow (gpm)	Head loss (feet)	Velocity (fps)	Upstrm. HGL (feet)
6	160	159	163	49.7	0.2	0.6	270.3
1	160	161	164	0.0	0.0	0.0	270.3
6	162	160	165	49.7	0.1	0.6	270.4
8	146	162	166	49.7	0.0	0.3	270.4
4	158	163	167	28.4	0.4	0.7	270.0
8	157	165	168	52.1	0.0	0.3	270.0
8	165	166	169	8.0	0.0	0.1	270.0
6	166	167	170	0.0	0.0	0.0	270.0
4	166	168	171	8.0	0.0	0.2	270.0
8	165	169	172	44.1	0.0	0.3	270.0
6	169	170	173	73.6	0.2	0.8	269.9
4	163	164	174	28.4	0.6	0.7	269.6
8	112	171	175	52.0	0.0	0.3	270.4
8	171	172	176	0.0	0.0	0.0	270.3
8	171	173	177	52.0	0.0	0.3	270.3
8	173	150	178	52.0	0.0	0.3	270.3
8	33	201	201	43.0	0.1	0.3	270.1
8	201	202	202	43.0	0.1	0.3	269.9
8	202	203	203	43.0	0.1	0.3	269.8
8	203	204	204	31.0	0.0	0.2	269.7
8	204	205	205	31	0.05	0.2	269.63
8	205	206	206	21.0	0.0	0.1	269.6
8	206	207	207	0.0	0.0	0.0	269.6
8	207	208	208	0.0	0.0	0.0	269.6
8	208	209	209	0	0	0	269.57
8	209	210	210	0	0	0	269.57
8	210	211	211	0	0	0	269.57
8	211	212	212	0.0	0.0	0.0	269.6
8	212	213	213	0.0	0.0	0.0	269.6
8	213	214	214	0.0	0.0	0.0	269.6
6	215	214	215	0.0	0.0	0.0	269.6
8	216	215	216	0.0	0.0	0.0	269.6
4	206	231	231	21.0	104.6	0.5	269.6
6	231	232	232	21.0	0.0	0.2	165.0
4	232	233	233	21.0	0.6	0.5	165.0
6	233	234	234	21.0	0.1	0.2	164.4
4	234	235	235	21.0	1.0	0.5	164.4
4	235	236	236	9.0	0.3	0.2	163.4
4	236	237	237	3.0	0.0	0.1	163.1
4	203	251	251	12.0	0.2	0.3	269.7
4	251	252	252	12.0	0.2	0.3	269.5
4	252	253	253	12.0	0.2	0.3	269.3

Peak Hour Demand for 1,386 ERUs

Pipe Flows:

Pipe Dia. (inches)	Upstrm. Node	Dnstrm. Node	Pipe No.	Flow (gpm)	Head loss (feet)	Velocity (fps)	Upstrm. HGL (feet)
8	102	261	261	35.5	0.0	0.2	270.0
4	261	262	262	6.0	0.1	0.2	270.0
4	262	263	263	6.0	0.0	0.2	270.0
8	261	264	264	29.5	0.0	0.2	270.0
8	264	265	265	29.5	0.0	0.2	270.0
8	265	266	266	29.5	0.0	0.2	270.0
1	266	267	267	0.0	0.0	0.0	270.0
8	266	169	268	29.5	0.0	0.2	270.0
8	30	281	280	30.7	0.0	0.2	270.1
3	281	282	281	29.0	7.1	1.3	270.1
3	282	283	282	23.0	1.8	1.0	263.0
2	283	284	283	0.0	0.0	0.0	261.2
3	283	285	284	23.0	5.1	1.0	261.2
2	285	286	285	3.0	0.8	0.3	256.0
1	286	287	286	3.0	19.7	1.2	255.2
4	282	288	287	6.0	0.0	0.2	263.0
1	288	289	288	3.0	7.6	1.2	263.0
1	288	290	289	3.0	7.2	1.2	263.0
4	164	301	301	25.7	0.4	0.7	269.0
4	301	302	302	25.7	1.0	0.7	268.6
8	302	303	303	25.7	0.0	0.2	267.5
8	303	304	304	59.0	0.1	0.4	267.5
8	304	305	305	59.0	0.1	0.4	267.4
4	305	306	306	59.0	14.9	1.5	267.3
4	306	307	307	59.0	4.3	1.5	252.4
4	307	308	308	25.0	1.5	0.6	248.1
4	308	309	309	19.0	0.2	0.5	246.6
4	309	310	310	8.0	0.1	0.2	246.4
2	310	311	311	8.0	2.4	0.8	246.3
4	309	312	312	7.0	0.1	0.2	246.4
2	308	313	313	6.0	1.4	0.6	246.6
6	170	314	314	65.625	0.44	0.74	269.76
6	314	315	315	48.3	0.17	0.55	269.32
6	315	316	316	48.3	0.18	0.55	269.15
6	316	317	317	48.3	0.2	0.6	269.0
6	317	318	318	38.3	0.1	0.4	268.8
4	318	319	319	33.3	0.0	0.9	268.7
4	319	320	320	33.3	0.5	0.9	268.7
4	320	303	321	33.3	0.7	0.9	268.2
4	314	164	322	14.3	0.4	0.4	269.3
6	317	321	323	7.0	0.0	0.1	268.8
6	66	401	401	13.0	0.0	0.2	271.2

Peak Hour Demand for 1,386 ERUs

Pipe Flows:

Pipe Dia. (inches)	Upstrm. Node	Dnstrm. Node	Pipe No.	Flow (gpm)	Head loss (feet)	Velocity (fps)	Upstrm. HGL (feet)
6	401	402	402	6.0	0.0	0.1	271.2
6	402	403	403	6.0	0.0	0.1	271.2
4	401	404	404	7.0	0.0	0.2	271.2
4	404	405	405	4.0	0.0	0.1	271.1
4	405	406	406	4.0	0.0	0.1	271.1
4	404	407	407	3.0	0.0	0.1	271.1
8	320	901	901	0.0	0.0	0.0	268.2

Node Pressures:

Node No.	Elevation (feet)	Demand (gpm)	HGL (feet)	Pressure (psi)	Static Pressure (psi) Full Reservoir
1	230	-1140	290	26.0	28.1
2	230	0	289.15	25.6	28.1
3	220	0	284.81	28.1	32.5
4	215	0	280.8	28.49	34.6
5	210	33	276.53	28.8	36.8
6	165	0	275.23	47.72	56.3
7	120	0	273.67	66.52	75.8
8	100	0	271.78	74.36	84.4
9	115	0	270.77	67.43	77.9
10	100	0	270.4	73.77	84.4
11	100	16	270.41	73.77	84.4
12	145	0	270.52	54.34	64.9
13	120	20	270.52	65.16	75.8
14	110	0	270.52	69.49	80.1
15	105	0	270.52	71.66	82.3
16	85	0	270.53	80.32	90.9
17	70	0	270.53	86.81	97.4
18	50	0	270.53	95.47	106.1
19	55	0	271.38	93.67	103.9
20	45	0.0	271.4	98.0	108.2
21	30	0.0	271.4	104.5	114.7
22	25	41.0	271.5	106.7	116.9
23	45	0.0	271.6	98.1	108.2
24	80	0.0	271.7	83.0	93.1
25	105	0.0	271.7	72.2	82.3
26	120	41.0	271.7	65.7	75.8
27	100	28.0	270.4	73.8	84.4

Peak Hour Demand for 1,386 ERUs

Node Pressures:

Node No.	Elevation (feet)	Demand (gpm)	HGL (feet)	Pressure (psi)	Static Pressure (psi) Full Reservoir
28	100	41.0	270.2	73.7	84.4
29	100	16.0	270.2	73.7	84.4
30	95	0.0	270.1	75.8	86.6
31	95	41.0	270.1	75.8	86.6
32	90	0.0	270.1	78.0	88.7
33	90	24.0	270.1	78.0	88.7
34	215	0.0	284.7	30.2	34.6
35	215	17.0	280.6	28.4	34.6
36	220	0.0	289.1	29.9	32.5
37	205	0.0	289.0	36.3	39.0
38	195	0.0	289.0	40.7	43.3
39	170	0.0	288.5	51.3	54.1
40	130	0.0	286.8	67.9	71.4
41	125	0.0	286.8	70.1	73.6
42	115	33.0	275.8	69.6	77.9
43	105	0.0	273.5	72.9	82.3
44	115	0.0	271.8	67.9	77.9
45	165	0.0	271.8	46.2	56.3
46	160	8.0	271.8	48.4	58.4
47	105	0.0	275.4	73.8	82.3
48	100	0.0	275.4	75.9	84.4
49	65	0.0	274.2	90.6	99.6
50	55	17.0	274.2	94.9	103.9
51	45	0.0	273.7	99.0	108.2
52	55	0.0	273.9	94.8	103.9
53	35	12.0	271.7	102.5	112.6
54	40	0.0	271.7	100.3	110.4
55	40	0.0	271.7	100.3	110.4
56	95	0.0	271.6	76.4	86.6
57	100	0.0	271.5	74.2	84.4
58	75	0.0	271.4	85.0	95.2
59	65	0.0	271.4	89.3	99.6
60	55	24.0	271.4	93.7	103.9
61	125	16.0	271.4	63.4	73.6
62	90	0.0	271.4	78.5	88.7
63	200	0.0	271.3	30.9	41.1
64	205	0	271.29	28.7	39.0
65	205	0	271.22	28.67	39.0
66	200	33	271.16	30.8	41.1
67	30	0	271.7	104.63	114.7
68	35	0	271.7	102.47	112.6
69	25	0.0	271.7	106.8	116.9

Peak Hour Demand for 1,386 ERUs

Node Pressures:

Node No.	Elevation (feet)	Demand (gpm)	HGL (feet)	Pressure (psi)	Static Pressure (psi) Full Reservoir
70	90	0.0	272.7	79.1	88.7
71	25	33.0	271.6	106.8	116.9
72	65	0.0	271.9	89.6	99.6
73	85	0.0	271.9	80.9	90.9
74	60	33.0	271.7	91.6	101.7
75	80	0.0	271.7	83.0	93.1
76	80	0.0	271.7	83.0	93.1
77	145	17.0	272.1	55.0	64.9
78	115	0.0	272.8	68.3	77.9
79	120	0.0	273.7	66.5	75.8
101	100	0.0	270.1	73.6	84.4
102	100	37.0	270.0	73.6	84.4
103	90	8.0	270.1	78.0	88.7
111	100	8.0	270.4	73.8	84.4
112	100	17.0	270.4	73.8	84.4
113	130	57.0	270.7	60.9	71.4
114	155	0.0	270.6	50.1	60.6
115	140	0.0	270.7	56.6	67.1
116	140	0.0	270.8	56.6	67.1
117	125	0.0	271.4	63.4	73.6
118	105	0.0	271.1	71.9	82.3
119	85	41.0	270.7	80.4	90.9
120	75	0.0	270.7	84.7	95.2
121	85	0.0	270.7	80.4	90.9
122	100	37.0	270.5	73.8	84.4
123	110	0.0	270.5	69.5	80.1
124	120	0.0	270.5	65.2	75.8
125	115	0.0	270.8	67.4	77.9
126	80	0.0	270.8	82.6	93.1
127	100	8.0	270.5	73.8	84.4
128	80	0.0	270.7	82.6	93.1
129	70	0.0	270.8	86.9	97.4
130	60	0.0	270.8	91.3	101.7
131	75	41.0	270.8	84.8	95.2
141	35	17.0	270.5	102.0	112.6
142	40	8.0	271.0	100.0	110.4
143	20	0.0	270.5	108.4	119.0
144	15	0.0	270.4	110.6	121.2
145	25	17.0	270.4	106.2	116.9
146	35	0.0	270.4	101.9	112.6
147	55	0.0	270.3	93.2	103.9
148	75	0.0	270.3	84.5	95.2

Peak Hour Demand for 1,386 ERUs

Node Pressures:

Node No.	Elevation (feet)	Demand (gpm)	HGL (feet)	Pressure (psi)	Static Pressure (psi) Full Reservoir	
149	90	17.0	270.3	78.1	88.7	
150	85	0	270.26	80.2	90.9	
151	85	17	270.17	80.16	90.9	
152	80	8	270.16	82.32	93.1	
153	85	0	270.1	80.13	90.9	
154	90	8	270.1	77.97	88.7	
155	80	0.0	270.1	82.3	93.1	
156	80	8.0	270.1	82.3	93.1	
157	105	41.0	270.0	71.4	82.3	
158	120	0.0	270.0	64.9	75.8	
159	105	0.0	270.1	71.5	82.3	
160	75	0.0	270.3	84.5	95.2	
161	65	0.0	270.3	88.9	99.6	
162	40	0.0	270.4	99.7	110.4	
163	130	0.0	269.6	60.4	71.4	
164	120	17.0	269.0	64.5	75.8	
165	125	0.0	270.0	62.8	73.6	
166	130	0.0	270.0	60.6	71.4	
167	135	0.0	270.0	58.4	69.3	
168	135	8.0	270.0	58.4	69.3	
169	100	0.0	269.9	73.6	84.4	
170	130	8.0	269.8	60.5	71.4	
171	125	0.0	270.3	62.9	73.6	
172	125	0.0	270.3	62.9	73.6	
173	110	0.0	270.3	69.4	80.1	
201	100	0.0	269.9	73.6	84.4	
202	160	0.0	269.8	47.5	58.4	
203	180	0.0	269.7	38.8	49.8	
204	160	0.0	269.6	47.5	58.4	
205	100	10.0	269.6	73.4	84.4	
206	60	0.0	269.6	90.7	101.7	
207	40	0.0	269.6	99.4	110.4	
208	55	0.0	269.6	92.9	103.9	
209	45	0.0	269.6	97.2	108.2	
210	25	0.0	269.6	105.9	116.9	
211	30	0.0	269.6	103.7	114.7	
212	50	0.0	269.6	95.1	106.1	
213	20	0.0	269.6	108.0	119.0	
214	35	0.0	269.6	101.5	112.6	
215	35	0.0	269.6	101.5	112.6	
216	35	0.0	269.6	101.5	112.6	
231	60	0.0	165.0	45.5	45.5	Pressure reduced

Peak Hour Demand for 1,386 ERUs

Node Pressures:

Node No.	Elevation (feet)	Demand (gpm)	HGL (feet)	Pressure (psi)	Static Pressure (psi) Full Reservoir	
232	80	0.0	165.0	36.8	36.8	Pressure reduced
233	40	0.0	164.4	53.9	54.1	Pressure reduced
234	20	0.0	164.4	62.5	62.8	Pressure reduced
235	20	12.0	163.4	62.1	62.8	Pressure reduced
236	20	6.0	163.1	62.0	62.8	Pressure reduced
237	10	3.0	163.1	66.3	67.1	Pressure reduced
251	150	0.0	269.5	51.7	62.8	
252	140	0.0	269.3	56.0	67.1	
253	130	12	269.05	60.19	71.4	
261	110	0	269.99	69.26	80.1	
262	100	0	269.95	73.57	84.4	
263	95	6	269.92	75.72	86.6	
264	120	0	269.96	64.92	75.8	
265	120	0.0	270.0	64.9	75.8	
266	120	0.0	270.0	64.9	75.8	
267	120	0.0	270.0	64.9	75.8	
281	115	0.0	270.1	67.1	77.9	
282	115	0.0	263.0	64.1	77.9	
283	105	0.0	261.2	67.6	82.3	
284	105	0.0	261.2	67.6	82.3	
285	120	20.0	256.0	58.9	75.8	
286	100	0.0	255.2	67.2	84.4	
287	160	3.0	235.5	32.7	58.4	
288	145	0.0	263.0	51.1	64.9	
289	175	3.0	255.4	34.8	51.9	
290	175	3.0	255.8	35.0	51.9	
301	100	0.0	268.6	73.0	84.4	
302	80	0.0	267.5	81.2	93.1	
303	80	0.0	267.5	81.2	93.1	
304	100	0.0	267.4	72.5	84.4	
305	100	0.0	267.3	72.4	84.4	
306	60	0.0	252.4	83.3	101.7	
307	60	34.0	248.1	81.4	101.7	
308	35	0.0	246.6	91.6	112.6	
309	35	4.0	246.4	91.5	112.6	
310	10	0.0	246.3	102.3	123.4	
311	10	8.0	243.9	101.3	123.4	
312	10	7.0	246.3	102.3	123.4	
313	10	6.0	245.2	101.8	123.4	
314	120	3.0	269.3	64.6	75.8	
315	110	0.0	269.2	68.9	80.1	
316	120	0.0	269.0	64.5	75.8	

Peak Hour Demand for 1,386 ERUs

Node Pressures:

Node No.	Elevation (feet)	Demand (gpm)	HGL (feet)	Pressure (psi)	Static Pressure (psi) Full Reservoir
317	170	3.0	268.8	42.8	54.1
318	150	5.0	268.7	51.4	62.8
319	150	0.0	268.7	51.4	62.8
320	148	0.0	268.2	52.0	63.6
321	202	7.0	268.8	28.9	40.3
401	190	0.0	271.2	35.1	45.5
402	140	0.0	271.2	56.8	67.1
403	100	6.0	271.1	74.1	84.4
404	180	0.0	271.1	39.5	49.8
405	180	0.0	271.1	39.5	49.8
406	190	4.0	271.1	35.1	45.5
407	100	3.0	271.1	74.1	84.4
901	127	0.0	268.2	61.1	72.7

Maximum unbalanced head in any loop: < 0.001 in loop 12

[b]

NETWORK ANALYSIS

50% PHD for 1,386 ERUs + 500 gpm Fire Flow at Sherman & Madrona

Operating parameters:

Supply only from Sunset Terrace Reservoirs (In-Town and Ft. Casey WTPs not pumping)
Sunset Terrace Reservoir at 55 foot level (down 10 feet). Existing system.

Source Reservoirs:

Node No.	No. of Pumps	Elev. of Pumps	Pumps Flows and Related Heads (height of water in reservoir)			
			0	1000	2000	Sunset Terrace
1	1	230	55	55	55	

Booster Pumps:

Pipe No.	No. of Pumps	Pumps Flows and Related Heads (pump curve)

None operating

Pressure Reducing Valves:

PRV No.	Pipe No.	Ref. Node	Downstream HGL	K-value	CV feature	
1	33	101	225	0	YES	Engle Road

Pipe Flows:

Pipe Dia. (inches)	Upstrm. Node	Dnstrm. Node	Pipe No.	Flow (gpm)	Head loss (feet)	Velocity (fps)	Upstrm. HGL (feet)
12	1	2	1	1070.0	0.8	3.0	285.0
8	2	3	2	682.9	3.9	4.4	284.3
8	3	4	3	591.0	3.6	3.8	280.4
8	4	5	4	591.0	3.9	3.8	276.7
10	5	6	5	657.9	1.2	2.7	272.9
10	6	7	6	657.9	1.5	2.7	271.6
10	7	78	7	657.9	0.9	2.7	270.1
10	8	9	8	465.3	1.3	1.9	268.3
10	9	10	9	324.8	0.5	1.3	267.0
10	10	11	10	-15.1	0.0	-0.1	266.5
10	11	12	11	-166.8	-0.2	-0.7	266.5
10	12	13	12	-30.1	0.0	-0.1	266.6
10	13	14	13	-27.7	0.0	-0.1	266.6
10	14	15	14	65.9	0.0	0.3	266.6
10	15	16	15	-32.5	0.0	-0.1	266.6
10	16	17	16	62.2	0.0	0.3	266.6
10	17	18	17	40.4	0.0	0.2	266.6
10	17	18	18	21.9	0.0	0.1	266.6
10	19	20	19	0.0	0.0	0.0	268.0
10	20	21	20	-130.3	0.0	-0.5	268.0

50% PHD for 1,386 ERUs + 500 gpm Fire Flow at Sherman & Madrona

Pipe Flows:

Pipe Dia. (inches)	Upstrm. Node	Dnstrm. Node	Pipe No.	Flow (gpm)	Head loss (feet)	Velocity (fps)	Upstrm. HGL (feet)
10	21	22	21	-232.7	-0.1	-1.0	268.0
10	23	22	22	96.7	0.1	0.4	268.2
10	24	23	23	153.3	0.1	0.6	268.3
10	25	24	24	70.9	0.0	0.3	268.3
10	26	25	25	57.3	0.0	0.2	268.3
10	8	26	26	77.8	0.0	0.3	268.3
12	10	27	27	335.9	0.0	1.0	266.5
12	27	28	28	321.9	0.2	0.9	266.4
12	28	29	29	301.4	0.1	0.9	266.3
12	29	30	30	293.4	0.1	0.8	266.1
12	30	31	31	201.8	0.0	0.6	266.0
12	31	32	32	25.3	0.0	0.1	266.0
12	32	33	33	33.5	0.0	0.1	266.0
8	3	34	34	91.9	0.1	0.6	280.4
4	34	35	35	91.9	3.4	2.4	280.2
4	35	5	36	83.4	4.0	2.1	276.9
12	2	36	37	387.1	0.0	1.1	284.3
12	36	37	38	387.1	0.1	1.1	284.2
6	37	38	39	0.0	0.0	0.0	284.1
12	37	39	40	387.1	0.4	1.1	284.1
6	39	40	41	387.1	1.5	4.4	283.7
4	40	41	42	0.0	0.0	0.0	282.2
6	40	42	43	387.1	9.7	4.4	282.2
6	42	43	44	213.8	2.3	2.4	272.5
4	43	44	45	57.1	1.7	1.5	270.2
4	44	45	46	4.0	0.0	0.1	268.5
4	45	46	47	4.0	0.0	0.1	268.5
6	42	47	48	156.8	0.4	1.8	272.5
4	47	48	49	0.0	0.0	0.0	272.2
6	47	49	50	156.8	1.0	1.8	272.2
6	49	50	51	44.8	0.0	0.5	271.1
4	50	51	52	36.3	0.5	0.9	271.1
6	49	52	53	112.0	0.3	1.3	271.1
6	52	51	54	112.0	0.3	1.3	270.8
4	51	53	55	148.3	1.9	3.8	270.6
8	53	54	56	43.0	0.0	0.3	268.7
6	54	55	57	0.0	0.0	0.0	268.6
8	54	56	58	43.0	0.0	0.3	268.6
8	56	57	59	43.0	0.0	0.3	268.6
6	57	58	60	12.0	0.0	0.1	268.6
8	58	59	61	5.2	0.0	0.0	268.6
8	58	60	62	6.8	0.0	0.0	268.6

50% PHD for 1,386 ERUs + 500 gpm Fire Flow at Sherman & Madrona

Pipe Flows:

Pipe Dia. (inches)	Upstrm. Node	Dnstrm. Node	Pipe No.	Flow (gpm)	Head loss (feet)	Velocity (fps)	Upstrm. HGL (feet)
8	59	60	63	5.2	0.0	0.0	268.6
8	57	61	64	31.0	0.0	0.2	268.6
4	61	62	65	0.0	0.0	0.0	268.6
8	61	63	66	23.0	0.0	0.2	268.6
8	63	64	67	23.0	0.0	0.2	268.6
8	64	65	68	23.0	0.0	0.2	268.5
6	65	66	69	23.0	0.0	0.3	268.5
8	53	67	70	99.3	0.1	0.6	268.7
2	67	68	71	0.0	0.0	0.0	268.6
8	67	69	72	99.3	0.1	0.6	268.6
8	69	71	73	128.6	0.1	0.8	268.6
8	71	22	74	156.6	0.4	1.0	268.5
4	70	69	75	29.3	0.9	0.8	269.4
6	72	71	76	44.4	0.2	0.5	268.6
6	43	70	77	156.7	0.8	1.8	270.2
6	70	72	78	127.4	0.8	1.5	269.4
1	72	73	79	0.0	0.0	0.0	268.6
6	72	74	80	83.0	0.3	0.9	268.6
6	74	23	81	58.5	0.2	0.7	268.3
6	74	75	82	8.0	0.0	0.1	268.3
6	44	75	83	53.1	0.2	0.6	268.5
6	77	78	84	-114.8	-0.6	-1.3	268.7
6	76	77	85	-106.3	-0.3	-1.2	268.3
6	75	76	86	-21.4	0.0	-0.2	268.3
8	24	75	87	-82.4	-0.1	-0.5	268.3
8	25	76	88	-84.9	-0.1	-0.5	268.3
10	78	8	89	543.2	1.0	2.2	269.3
6	7	79	90	0.0	0.0	0.0	270.1
8	32	281	92	-12.2	0.0	-0.1	266.0
8	31	101	93	156.0	0.3	1.0	266.0
6	30	101	101	64.9	0.3	0.7	266.0
8	101	102	102	220.9	0.3	1.4	265.7
6	32	103	103	4.0	0.0	0.1	266.0
6	10	111	111	4.0	0.0	0.1	266.5
8	11	112	112	143.7	0.2	0.9	266.5
10	9	113	113	140.5	0.1	0.6	267.0
8	113	114	114	112.0	0.2	0.7	266.9
8	114	12	115	136.7	0.2	0.9	266.8
4	114	115	116	-24.7	-0.1	-0.6	266.8
4	115	116	117	-24.7	-0.2	-0.6	266.9
4	116	117	118	-44.5	-0.9	-1.1	267.1
6	117	25	119	-71.3	-0.3	-0.8	268.0

50% PHD for 1,386 ERUs + 500 gpm Fire Flow at Sherman & Madrona

Pipe Flows:

Pipe Dia. (inches)	Upstrm. Node	Dnstrm. Node	Pipe No.	Flow (gpm)	Head loss (feet)	Velocity (fps)	Upstrm. HGL (feet)
4	117	118	120	26.9	0.1	0.7	268.0
4	118	119	121	26.9	0.2	0.7	267.9
2	119	120	122	6.4	0.6	0.7	267.7
4	120	121	123	6.4	0.0	0.2	267.1
6	121	122	124	101.0	0.4	1.2	267.1
8	123	122	125	-82.5	-0.1	-0.5	266.7
4	125	126	126	-7.7	0.0	-0.2	267.0
4	125	124	127	27.5	0.3	0.7	267.0
4	13	124	128	-12.4	-0.1	-0.3	266.6
6	123	124	129	-15.1	0.0	-0.2	266.7
8	14	123	130	-93.6	-0.1	-0.6	266.6
6	123	127	131	4.0	0.0	0.1	266.7
6	16	128	132	-94.7	-0.3	-1.1	266.6
6	128	129	133	-94.7	-0.2	-1.1	266.9
4	126	129	134	-7.7	0.0	-0.2	267.0
6	129	130	135	0.0	0.0	0.0	267.1
6	129	21	136	-102.5	-1.0	-1.2	267.1
6	121	131	137	-94.6	-0.2	-1.1	267.1
6	23	131	138	115.1	0.9	1.3	268.2
4	116	125	139	19.7	0.1	0.5	267.1
10	18	141	141	-31.0	0.0	-0.1	266.6
6	141	142	142	-126.3	-0.7	-1.4	266.6
6	20	142	143	130.3	0.7	1.5	268.0
6	141	143	144	86.8	0.3	1.0	266.6
6	143	144	145	86.8	0.2	1.0	266.4
6	144	145	146	8.5	0.0	0.1	266.2
6	146	144	147	-78.3	-0.2	-0.9	266.0
6	18	146	148	93.2	0.6	1.1	266.6
6	147	146	149	-41.3	-0.1	-0.5	265.9
6	148	147	150	-41.3	-0.1	-0.5	265.8
6	149	148	151	89.9	0.2	1.0	266.0
6	15	149	152	98.4	0.6	1.1	266.6
8	148	150	153	131.1	0.2	0.8	265.8
8	150	151	154	266.4	0.4	1.7	265.7
4	151	152	155	4.0	0.0	0.1	265.3
8	151	153	156	253.9	0.5	1.6	265.3
6	153	154	157	4.0	0.0	0.1	264.7
8	153	155	158	249.9	0.4	1.6	264.7
8	155	157	159	245.9	0.5	1.6	264.4
6	155	156	160	4.0	0.0	0.1	264.4
8	157	158	161	27.4	0.0	0.2	263.9
6	159	158	162	130.2	0.5	1.5	264.4

50% PHD for 1,386 ERUs + 500 gpm Fire Flow at Sherman & Madrona

Pipe Flows:

Pipe Dia. (inches)	Upstrm. Node	Dnstrm. Node	Pipe No.	Flow (gpm)	Head loss (feet)	Velocity (fps)	Upstrm. HGL (feet)
6	160	159	163	130.2	1.1	1.5	265.5
1	160	161	164	0.0	0.0	0.0	265.5
6	162	160	165	130.2	0.4	1.5	265.8
8	146	162	166	130.2	0.2	0.8	266.0
4	158	163	167	157.7	10.2	4.0	263.9
8	157	165	168	197.9	0.5	1.3	263.9
8	165	166	169	4.0	0.0	0.0	263.4
6	166	167	170	0.0	0.0	0.0	263.4
4	166	168	171	4.0	0.0	0.1	263.4
8	165	169	172	193.9	0.5	1.2	263.4
6	169	170	173	393.3	3.9	4.5	262.9
4	163	164	174	157.7	15.1	4.0	253.7
8	112	171	175	135.2	0.2	0.9	266.3
8	171	172	176	0.0	0.0	0.0	266.1
8	171	173	177	135.2	0.3	0.9	266.1
8	173	150	178	135.2	0.2	0.9	265.9
8	33	201	201	21.5	0.0	0.1	266.0
8	201	202	202	21.5	0.0	0.1	266.0
8	202	203	203	21.5	0.0	0.1	265.9
8	203	204	204	15.5	0.0	0.1	265.9
8	204	205	205	15.5	0.0	0.1	265.9
8	205	206	206	10.5	0.0	0.1	265.9
8	206	207	207	0.0	0.0	0.0	265.9
8	207	208	208	0.0	0.0	0.0	265.9
8	208	209	209	0.0	0.0	0.0	265.9
8	209	210	210	0.0	0.0	0.0	265.9
8	210	211	211	0.0	0.0	0.0	265.9
8	211	212	212	0.0	0.0	0.0	265.9
8	212	213	213	0.0	0.0	0.0	265.9
8	213	214	214	0.0	0.0	0.0	265.9
6	215	214	215	0.0	0.0	0.0	265.9
8	216	215	216	0.0	0.0	0.0	265.9
4	206	231	231	10.5	100.9	0.3	265.9
6	231	232	232	10.5	0.0	0.1	165.0
4	232	233	233	10.5	0.2	0.3	165.0
6	233	234	234	10.5	0.0	0.1	164.8
4	234	235	235	10.5	0.3	0.3	164.8
4	235	236	236	4.5	0.1	0.1	164.6
4	236	237	237	1.5	0.0	0.0	164.5
4	203	251	251	6.0	0.1	0.2	265.9
4	251	252	252	6.0	0.1	0.2	265.8
4	252	253	253	6.0	0.1	0.2	265.8

50% PHD for 1,386 ERUs + 500 gpm Fire Flow at Sherman & Madrona

Pipe Flows:

Pipe Dia. (inches)	Upstrm. Node	Dnstrm. Node	Pipe No.	Flow (gpm)	Head loss (feet)	Velocity (fps)	Upstrm. HGL (feet)
8	102	261	261	202.4	0.5	1.3	265.4
4	261	262	262	3.0	0.0	0.1	264.9
4	262	263	263	3.0	0.0	0.1	264.9
8	261	264	264	199.4	1.2	1.3	264.9
8	264	265	265	199.4	0.2	1.3	263.7
8	265	266	266	199.4	0.2	1.3	263.5
1	266	267	267	0.0	0.0	0.0	263.3
8	266	169	268	199.4	0.4	1.3	263.3
8	30	281	280	26.7	0.0	0.2	266.0
3	281	282	281	14.5	2.0	0.7	266.0
3	282	283	282	11.5	0.5	0.5	264.0
2	283	284	283	0.0	0.0	0.0	263.5
3	283	285	284	11.5	1.4	0.5	263.5
2	285	286	285	1.5	0.2	0.2	262.1
1	286	287	286	1.5	5.5	0.6	261.9
4	282	288	287	3.0	0.0	0.1	264.0
1	288	289	288	1.5	2.1	0.6	264.0
1	288	290	289	1.5	2.0	0.6	264.0
4	164	301	301	228.3	23.0	5.8	238.7
4	301	302	302	228.3	59.4	5.8	215.6
8	302	303	303	228.3	0.1	1.5	156.2
8	303	304	304	29.5	0.0	0.2	156.1
8	304	305	305	29.5	0.0	0.2	156.1
4	305	306	306	29.5	4.1	0.8	156.0
4	306	307	307	29.5	1.2	0.8	151.9
4	307	308	308	12.5	0.4	0.3	150.7
4	308	309	309	9.5	0.1	0.2	150.3
4	309	310	310	4.0	0.0	0.1	150.3
2	310	311	311	4.0	0.7	0.4	150.2
4	309	312	312	3.5	0.0	0.1	150.3
2	308	313	313	3.0	0.4	0.3	150.3
6	170	314	314	389.3	11.9	4.4	259.0
6	314	315	315	308.7	5.3	3.5	247.1
6	315	316	316	308.7	5.5	3.5	241.8
6	316	317	317	308.7	5.2	3.5	236.2
6	317	318	318	303.7	3.4	3.5	231.1
4	318	319	319	301.2	0.7	7.7	227.6
4	319	320	320	301.2	31.0	7.7	227.0
4	320	303	321	301.2	39.8	7.7	195.9
4	314	164	322	79.1	8.4	2.0	247.1
6	317	321	323	3.5	0.0	0.0	231.1
6	66	401	401	6.5	0.0	0.1	268.5

50% PHD for 1,386 ERUs + 500 gpm Fire Flow at Sherman & Madrona

Pipe Flows:

Pipe Dia. (inches)	Upstrm. Node	Dnstrm. Node	Pipe No.	Flow (gpm)	Head loss (feet)	Velocity (fps)	Upstrm. HGL (feet)
6	401	402	402	3.0	0.0	0.0	268.5
6	402	403	403	3.0	0.0	0.0	268.5
4	401	404	404	3.5	0.0	0.1	268.5
4	404	405	405	2.0	0.0	0.1	268.5
4	405	406	406	2.0	0.0	0.1	268.5
4	404	407	407	1.5	0.0	0.0	268.5
8	320	901	901	0.0	0.0	0.0	195.9

Node Pressures:

Node No.	Elevation (feet)	Demand (gpm)	HGL (feet)	Pressure (psi)	Static Pressure (psi) Full Reservoir
1	230	-1070.0	285.0	23.8	28.1
2	230	0.0	284.3	23.5	28.1
3	220	0.0	280.4	26.1	32.5
4	215	0.0	276.7	26.7	34.6
5	210	16.5	272.9	27.2	36.8
6	165	0.0	271.6	46.2	56.3
7	120	0.0	270.1	65.0	75.8
8	100	0.0	268.3	72.9	84.4
9	115	0.0	267.0	65.8	77.9
10	100	0.0	266.5	72.1	84.4
11	100	8.0	266.5	72.1	84.4
12	145	0.0	266.6	52.7	64.9
13	120	10.0	266.6	63.5	75.8
14	110	0.0	266.6	67.8	80.1
15	105	0.0	266.6	70.0	82.3
16	85	0.0	266.6	78.6	90.9
17	70	0.0	266.6	85.1	97.4
18	50	0.0	266.6	93.8	106.1
19	55	0.0	268.0	92.2	103.9
20	45	0.0	268.0	96.5	108.2
21	30	0.0	268.0	103.0	114.7
22	25	20.5	268.1	105.3	116.9
23	45	0.0	268.2	96.6	108.2
24	80	0.0	268.3	81.5	93.1
25	105	0.0	268.3	70.7	82.3
26	120	20.5	268.3	64.2	75.8
27	100	14.0	266.4	72.0	84.4

50% PHD for 1,386 ERUs + 500 gpm Fire Flow at Sherman & Madrona

Node Pressures:

Node No.	Elevation (feet)	Demand (gpm)	HGL (feet)	Pressure (psi)	Static Pressure (psi) Full Reservoir
28	100	20.5	266.3	72.0	84.4
29	100	8.0	266.1	71.9	84.4
30	95	0.0	266.0	74.0	86.6
31	95	20.5	266.0	74.0	86.6
32	90	0.0	266.0	76.2	88.7
33	90	12.0	266.0	76.2	88.7
34	215	0.0	280.2	28.2	34.6
35	215	8.5	276.9	26.8	34.6
36	220	0.0	284.2	27.8	32.5
37	205	0.0	284.1	34.2	39.0
38	195	0.0	284.1	38.6	43.3
39	170	0.0	283.7	49.2	54.1
40	130	0.0	282.2	65.9	71.4
41	125	0.0	282.2	68.1	73.6
42	115	16.5	272.5	68.2	77.9
43	105	0.0	270.2	71.5	82.3
44	115	0.0	268.5	66.4	77.9
45	165	0.0	268.5	44.8	56.3
46	160	4.0	268.5	47.0	58.4
47	105	0.0	272.2	72.4	82.3
48	100	0.0	272.2	74.5	84.4
49	65	0.0	271.1	89.2	99.6
50	55	8.5	271.1	93.6	103.9
51	45	0.0	270.6	97.7	108.2
52	55	0.0	270.8	93.4	103.9
53	35	6.0	268.7	101.2	112.6
54	40	0.0	268.6	99.0	110.4
55	40	0.0	268.6	99.0	110.4
56	95	0.0	268.6	75.2	86.6
57	100	0.0	268.6	73.0	84.4
58	75	0.0	268.6	83.8	95.2
59	65	0.0	268.6	88.1	99.6
60	55	12.0	268.6	92.5	103.9
61	125	8.0	268.6	62.2	73.6
62	90	0.0	268.6	77.3	88.7
63	200	0.0	268.6	29.7	41.1
64	205	0.0	268.5	27.5	39.0
65	205	0.0	268.5	27.5	39.0
66	200	16.5	268.5	29.7	41.1
67	30	0.0	268.6	103.3	114.7
68	35	0.0	268.6	101.1	112.6
69	25	0.0	268.6	105.4	116.9

50% PHD for 1,386 ERUs + 500 gpm Fire Flow at Sherman & Madrona

Node Pressures:

Node No.	Elevation (feet)	Demand (gpm)	HGL (feet)	Pressure (psi)	Static Pressure (psi) Full Reservoir
70	90	0.0	269.4	77.7	88.7
71	25	16.5	268.5	105.4	116.9
72	65	0.0	268.6	88.2	99.6
73	85	0.0	268.6	79.5	90.9
74	60	16.5	268.3	90.2	101.7
75	80	0.0	268.3	81.5	93.1
76	80	0.0	268.3	81.5	93.1
77	145	8.5	268.7	53.5	64.9
78	115	0.0	269.3	66.8	77.9
79	120	0.0	270.1	65.0	75.8
101	100	0.0	265.7	71.7	84.4
102	100	18.5	265.4	71.6	84.4
103	90	4.0	266.0	76.2	88.7
111	100	4.0	266.5	72.1	84.4
112	100	8.5	266.3	72.0	84.4
113	130	28.5	266.9	59.3	71.4
114	155	0.0	266.8	48.4	60.6
115	140	0.0	266.9	54.9	67.1
116	140	0.0	267.1	55.0	67.1
117	125	0.0	268.0	61.9	73.6
118	105	0.0	267.9	70.5	82.3
119	85	20.5	267.7	79.1	90.9
120	75	0.0	267.1	83.2	95.2
121	85	0.0	267.1	78.8	90.9
122	100	18.5	266.8	72.2	84.4
123	110	0.0	266.7	67.8	80.1
124	120	0.0	266.7	63.5	75.8
125	115	0.0	267.0	65.8	77.9
126	80	0.0	267.0	81.0	93.1
127	100	4.0	266.7	72.2	84.4
128	80	0.0	266.9	80.9	93.1
129	70	0.0	267.1	85.3	97.4
130	60	0.0	267.1	89.6	101.7
131	75	20.5	267.3	83.3	95.2
141	35	8.5	266.6	100.3	112.6
142	40	4.0	267.3	98.4	110.4
143	20	0.0	266.4	106.7	119.0
144	15	0.0	266.2	108.7	121.2
145	25	8.5	266.2	104.4	116.9
146	35	0.0	266.0	100.0	112.6
147	55	0.0	265.9	91.3	103.9
148	75	0.0	265.8	82.6	95.2

50% PHD for 1,386 ERUs + 500 gpm Fire Flow at Sherman & Madrona

Node Pressures:

Node No.	Elevation (feet)	Demand (gpm)	HGL (feet)	Pressure (psi)	Static Pressure (psi) Full Reservoir
149	90	8.5	266.0	76.2	88.7
150	85	0.0	265.7	78.2	90.9
151	85	8.5	265.3	78.0	90.9
152	80	4.0	265.2	80.2	93.1
153	85	0.0	264.7	77.8	90.9
154	90	4.0	264.7	75.6	88.7
155	80	0.0	264.4	79.8	93.1
156	80	4.0	264.4	79.8	93.1
157	105	20.5	263.9	68.8	82.3
158	120	0.0	263.9	62.3	75.8
159	105	0.0	264.4	69.0	82.3
160	75	0.0	265.5	82.5	95.2
161	65	0.0	265.5	86.8	99.6
162	40	0.0	265.8	97.8	110.4
163	130	0.0	253.7	53.6	71.4
164	120	8.5	238.7	51.4	75.8
165	125	0.0	263.4	59.9	73.6
166	130	0.0	263.4	57.8	71.4
167	135	0.0	263.4	55.6	69.3
168	135	4.0	263.4	55.6	69.3
169	100	0.0	262.9	70.5	84.4
170	130	4.0	259.0	55.8	71.4
171	125	0.0	266.1	61.1	73.6
172	125	0.0	266.1	61.1	73.6
173	110	0.0	265.9	67.5	80.1
201	100	0.0	266.0	71.8	84.4
202	160	0.0	265.9	45.9	58.4
203	180	0.0	265.9	37.2	49.8
204	160	0.0	265.9	45.8	58.4
205	100	5.0	265.9	71.8	84.4
206	60	0.0	265.9	89.1	101.7
207	40	0.0	265.9	97.8	110.4
208	55	0.0	265.9	91.3	103.9
209	45	0.0	265.9	95.6	108.2
210	25	0.0	265.9	104.3	116.9
211	30	0.0	265.9	102.1	114.7
212	50	0.0	265.9	93.4	106.1
213	20	0.0	265.9	106.4	119.0
214	35	0.0	265.9	99.9	112.6
215	35	0.0	265.9	99.9	112.6
216	35	0.0	265.9	99.9	112.6
231	60	0.0	165.0	45.5	45.5

50% PHD for 1,386 ERUs + 500 gpm Fire Flow at Sherman & Madrona 23

Node Pressures:

Node No.	Elevation (feet)	Demand (gpm)	HGL (feet)	Pressure (psi)		Static Pressure (psi) Full Reservoir
232	80	0.0	165.0	36.8		36.8
233	40	0.0	164.8	54.0		54.1
234	20	0.0	164.8	62.7		62.8
235	20	6.0	164.6	62.6		62.8
236	20	3.0	164.5	62.6		62.8
237	10	1.5	164.5	66.9		67.1
251	150	0.0	265.8	50.1		62.8
252	140	0.0	265.8	54.5		67.1
253	130	6.0	265.7	58.8		71.4
261	110	0.0	264.9	67.1		80.1
262	100	0.0	264.9	71.4		84.4
263	95	3.0	264.9	73.6		86.6
264	120	0.0	263.7	62.2		75.8
265	120	0.0	263.5	62.1		75.8
266	120	0.0	263.3	62.0		75.8
267	120	0.0	263.3	62.0		75.8
281	115	0.0	266.0	65.4		77.9
282	115	0.0	264.0	64.5		77.9
283	105	0.0	263.5	68.6		82.3
284	105	0.0	263.5	68.6		82.3
285	120	10.0	262.1	61.5		75.8
286	100	0.0	261.9	70.1		84.4
287	160	1.5	256.4	41.7		58.4
288	145	0.0	264.0	51.5		64.9
289	175	1.5	261.9	37.6		51.9
290	175	1.5	262.1	37.7		51.9
301	100	0.0	215.6	50.1		84.4
302	80	0.0	156.2	33.0		93.1
303	80	**500.0**	156.1	33.0	⇦	93.1
304	100	0.0	156.1	24.3		84.4
305	100	0.0	156.0	24.3		84.4
306	60	0.0	151.9	39.8		101.7
307	60	17.0	150.7	39.3		101.7
308	35	0.0	150.3	49.9		112.6
309	35	2.0	150.3	49.9		112.6
310	10	0.0	150.2	60.7		123.4
311	10	4.0	149.6	60.4		123.4
312	10	3.5	150.2	60.7		123.4
313	10	3.0	149.9	60.6		123.4
314	120	1.5	247.1	55.0		75.8
315	110	0.0	241.8	57.0		80.1
316	120	0.0	236.2	50.3		75.8

50% PHD for 1,386 ERUs + 500 gpm Fire Flow at Sherman & Madrona 24

Node Pressures:

Node No.	Elevation (feet)	Demand (gpm)	HGL (feet)	Pressure (psi)		Static Pressure (psi) Full Reservoir
317	170	1.5	231.1	26.4		54.1
318	150	2.5	227.6	33.6		62.8
319	150	0.0	227.0	33.3		62.8
320	148	0.0	195.9	20.7		63.6
321	202	3.5	231.1	**12.6**	See Note	40.3
401	190	0.0	268.5	34.0		45.5
402	140	0.0	268.5	55.6		67.1
403	100	3.0	268.5	72.9		84.4
404	180	0.0	268.5	38.3		49.8
405	180	0.0	268.5	38.3		49.8
406	190	2.0	268.5	34.0		45.5
407	100	1.5	268.5	72.9		84.4
901	127	0.0	195.9	29.8		72.7

Maximum unbalanced head in any loop: < 0.001 in loop 28

NOTE: Node 321 is the wholesale meter to Sarkisian Springs for supply of reservoir. No customers supplied directly from this point.

DRAWINGS

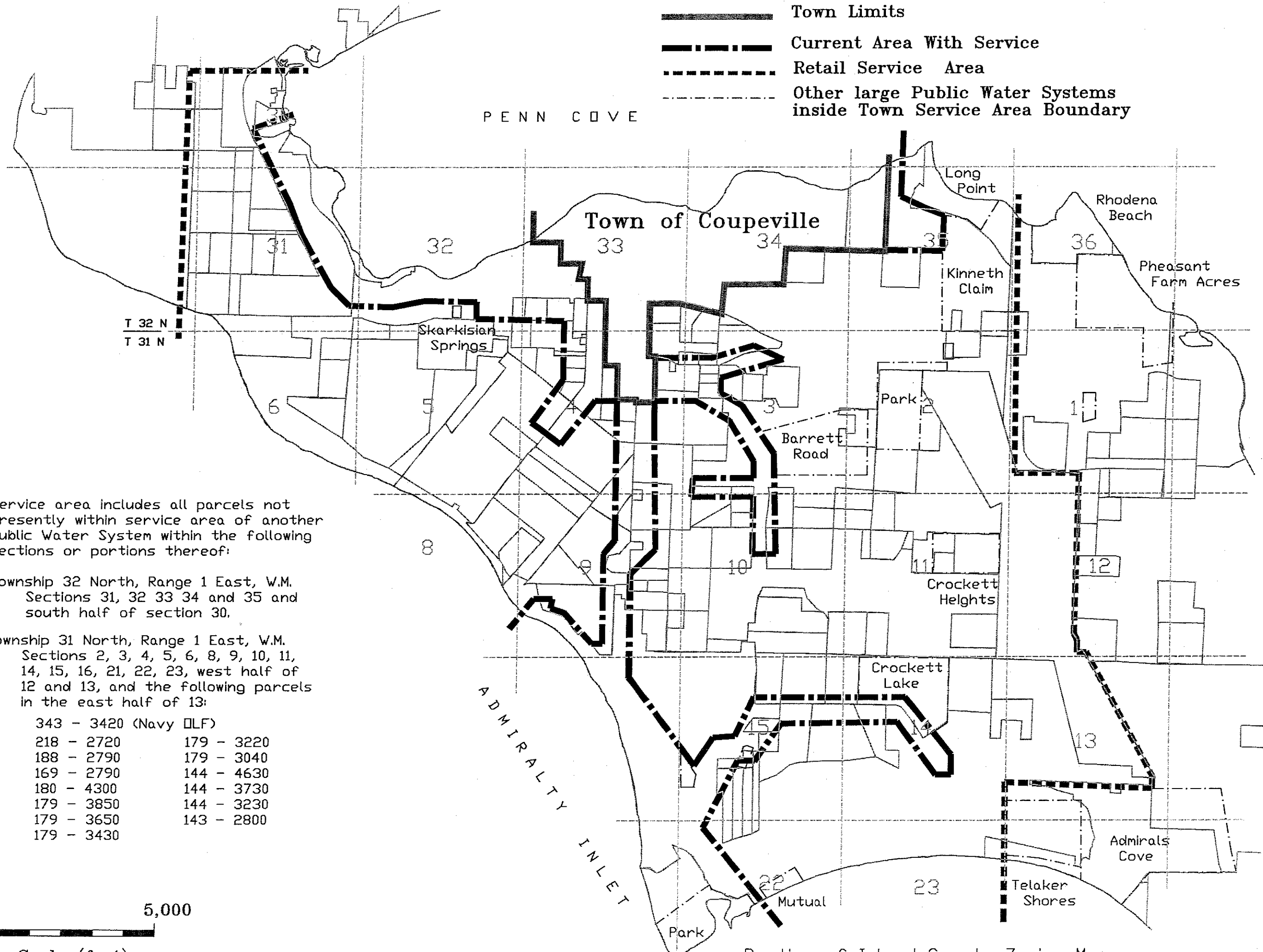

Service area includes all parcels not presently within service area of another Public Water System within the following Sections or portions thereof:

Township 32 North, Range 1 East, W.M.
Sections 31, 32 33 34 and 35 and south half of section 30.

Township 31 North, Range 1 East, W.M.
Sections 2, 3, 4, 5, 6, 8, 9, 10, 11, 14, 15, 16, 21, 22, 23, west half of 12 and 13, and the following parcels in the east half of 13:

343 - 3420 (Navy □LF)

218 - 2720	179 - 3220
188 - 2790	179 - 3040
169 - 2790	144 - 4630
180 - 4300	144 - 3730
179 - 3850	144 - 3230
179 - 3650	143 - 2800
179 - 3430	

0 5,000

Scale (feet)

GEORGE BRATTON, CIVIL ENGINEER
1252 S. Farragut Drive
Coupeville, Washington 98239

WATER DISTRIBUTION SYSTEM
RETAIL SERVICE AREA MAP

TOWN OF COUPEVILLE
P. O. Box 725
Coupeville, Washington 98239

PENN COVE

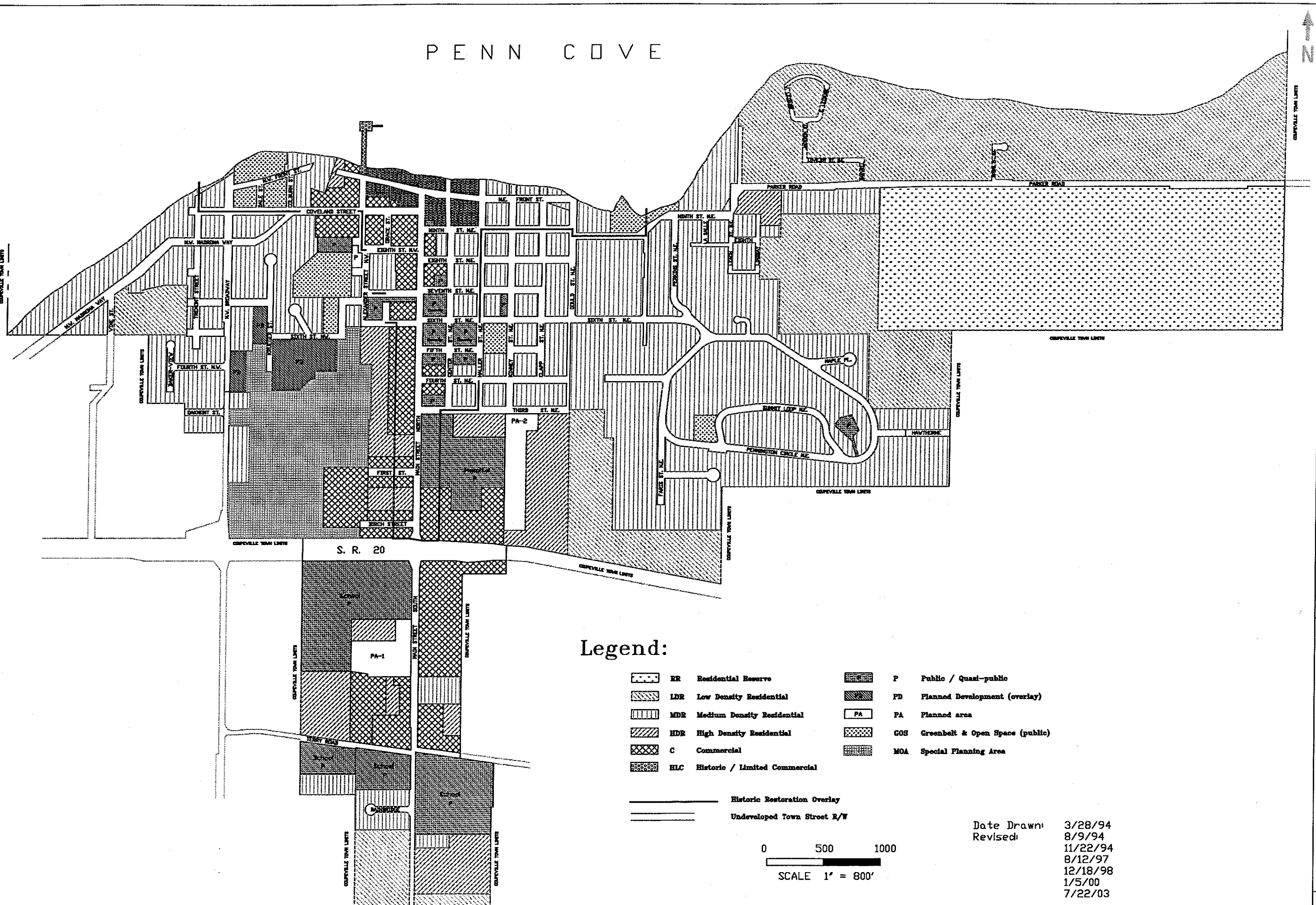

Legend:

RR	Residential Reserve		P	Public / Quasi-public
LDR	Low Density Residential		PD	Planned Development (overlay)
MDR	Medium Density Residential		PA	Planned area
HDR	High Density Residential		GOS	Greenbelt & Open Space (public)
C	Commercial		MOA	Special Planning Area
HLC	Historic / Limited Commercial			

Historic Restoration Overlay

Undeveloped Town Street R/W

0 500 1000

SCALE 1" = 800'

Date Drawn: 3/28/94
Revised: 8/9/94
11/22/94
8/12/97
12/18/98
1/5/00
7/22/03

WATER DISTRIBUTION SYSTEM
TOWN ZONING MAP

GEORGE BRATTON, CIVIL ENGINEER
1252 S. Farragut Drive
Coupeville, Washington 98239

TOWN OF COUPEVILLE
P. O. Box 725
Coupeville, Washington 98239

PENN COVE

Town of Coupeville

SEE TOWN COMPREHENSIVE PLAN FUTURE LAND USE MAP

ADMIRALTY INLET

ADMIRALTY BAY

NAVY OLF

Zoning Legend

CATEGORIES APPLICABLE TO SERVICE AREA (OUTSIDE OF TOWN LIMITS)

R	RURAL	4,980 Acres
RR	RURAL RESIDENTIAL	130 Acres (other PWS)
RF	RURAL FOREST	1,090 Acres
RA	RURAL AGRICULTURE	900 Acres
CA	COMMERCIAL AGRICULTURAL	1,660 Acres
P	PARK	160 Acres
LM	LIGHT MANUFACTURING	30 Acres
TOTAL		8,950 Acres within service area, outside of Town Limits

Service Area

Town Limits

Service Area Boundary

SERVICE AREA OUTSIDE OF TOWN LIMITS CONTAINS SEVERAL GROUP B AND GROUP A PUBLIC WATER SYSTEMS TOWN SERVICE AREA INCLUDES ALL LOTS NOT PRESENTLY WITHIN SERVICE AREA OF ANOTHER SYSTEM.

0 5,000

Scale (feet)

GEORGE BRATTON, CIVIL ENGINEER
1252 S. Farragut Drive
Coupeville, Washington 98239

WATER DISTRIBUTION SYSTEM
SERVICE AREA MAP
Land Use Description
Overlay of County Zoning Map

TOWN OF COUPEVILLE
P. O. Box 725
Coupeville, Washington 98239

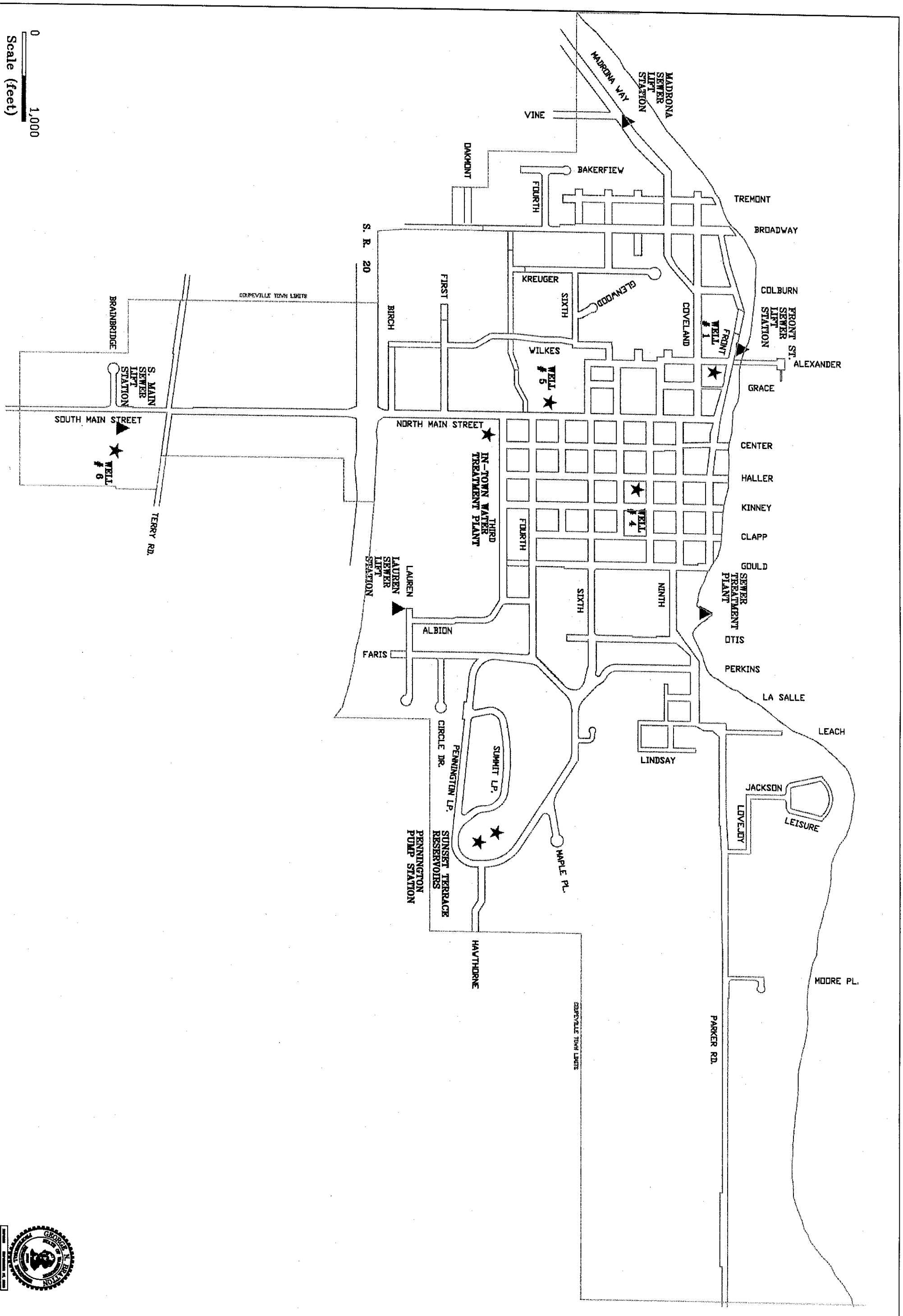

TOWN OF COUPEVEILLE
P. O. Box 725
Coupeville, Washington 98239

WATER DISTRIBUTION SYSTEM
WATER & SEWER FACILITIES
IN-TOWN SYSTEMS

GEORGE BRATTON, CIVIL ENGINEER
1252 S. Farragut Drive
Coupeville, Washington 98239

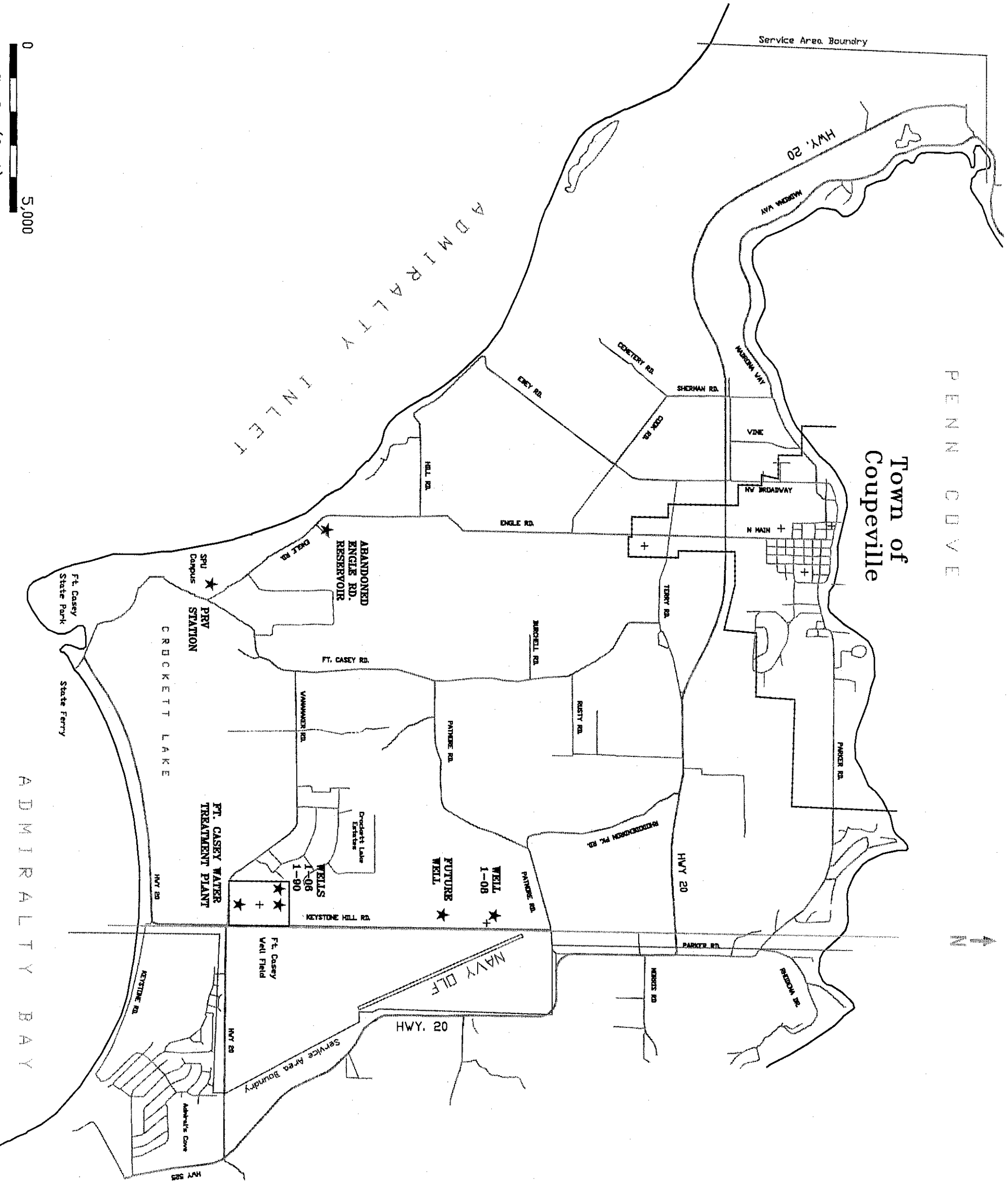

TOWN OF COUPEVEILLE
P. O. Box 725
Coupeville, Washington 98239

WATER DISTRIBUTION SYSTEM
WATER FACILITIES
OUT-OF-TOWN SYSTEM

GEORGE BRATTON, CIVIL ENGINEER
1252 S. Farragut Drive
Coupeville, Washington 98239

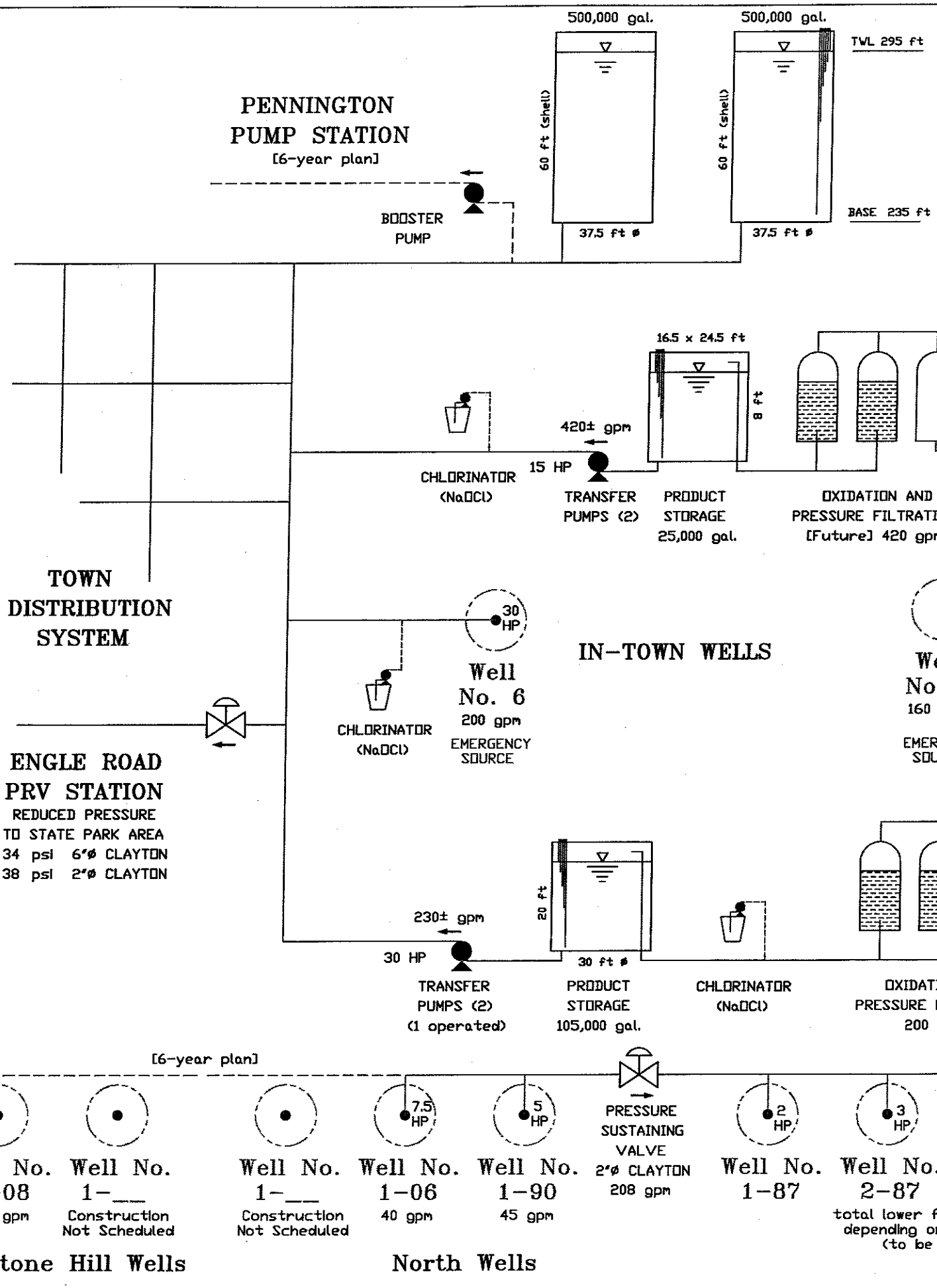

SUNSET TERRACE RESERVOIRS

LEVEL PROBES - SYSTEM CONTROL

60 ft.	TANK FULL	
54 ft.	PRIORITY No. 1	FT. CASEY TREATMENT PLANT
48 ft.	PRIORITY No. 2	IN-TOWN TREATMENT PLANT - LEAD TRANSFER PUMP
42 ft.	PRIORITY No. 3	IN-TOWN TREATMENT PLANT - LAG TRANSFER PUMP
36 ft.	PRIORITY No. 4	(not assigned)
30 ft.	LOW LEVEL ALARM	

WELL No. 1 IS NORMALLY NOT ON-LINE
WELL No. 6 IS ON MANUAL CONTROL ONLY

IN-TOWN WATER TREATMENT PLANT (Lag Supply)

LEVEL PROBES - RAW WATER

	ft.	HIGH LEVEL ALARM
8.0	ft.	ALL OFF
	ft.	WELL No. 4 ON
	ft.	WELL No. 5 ON
	ft.	WELL No. 1 ON
	ft.	LOW LEVEL ALARM, BOOSTER PUMPS OFF

LEVEL PROBES - PRODUCT WATER

	ft.	HIGH LEVEL ALARM
8.0	ft.	ALL OFF
	ft.	LEAD RAW WATER BOOSTER PUMP ON
	ft.	LAG RAW WATER BOOSTER PUMP ON
	ft.	LOW LEVEL ALARM, TRANSFER PUMPS OFF

FORT CASEY WATER TREATMENT PLANT AND WELL FIELD (Lead Supply)

LEVEL PROBES - RAW WATER

19.3	ft.	HIGH LEVEL ALARM
19.0	ft.	ALL OFF
18.3	ft.	LEAD WELLS ON (not active)
16.0	ft.	LAG WELLS ON (presently all wells)
13.0	ft.	LOW LEVEL ALARM, BOOSTER PUMPS OFF

LEVEL PROBES - PRODUCT WATER

19.3	ft.	HIGH LEVEL ALARM
19.0	ft.	ALL OFF
18.3	ft.	LEAD BOOSTER ON
18.0	ft.	LAG BOOSTER ON (not active)
15.0	ft.	LOW LEVEL ALARM, TRANSFER PUMPS OFF

FORT CASEY WELLS

GEORGE BRATTON, CIVIL ENGINEER
1252 S. Farragut Drive
Coupeville, Washington 98239

WATER DISTRIBUTION SYSTEM
System Schematic

TOWN OF COUPEVILLE
P.O. Box 725
Coupeville, Washington 98239

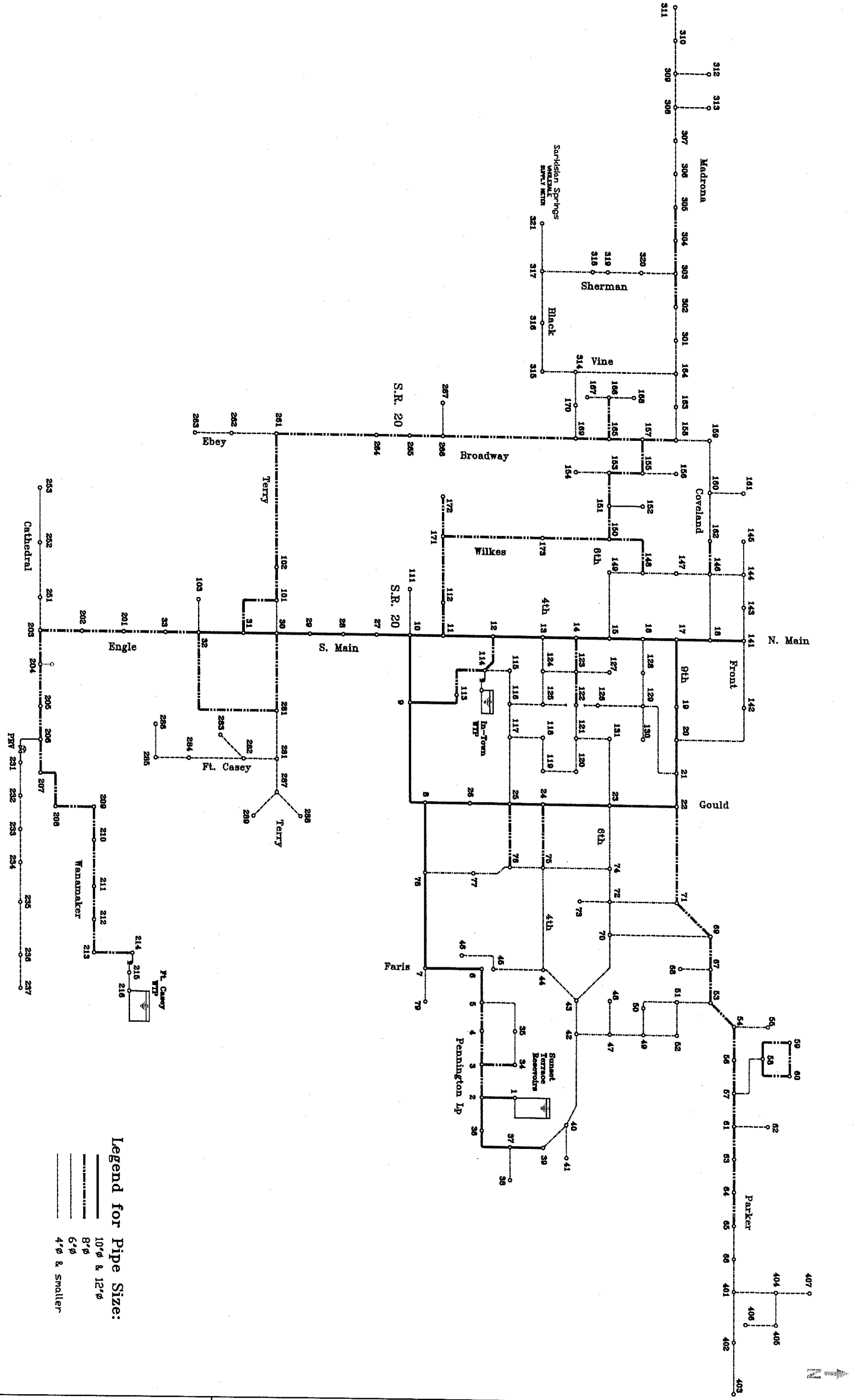

TOWN OF COUPEVEILLE
P. O. Box 725
Coupeville, Washington 98239

WATER DISTRIBUTION SYSTEM
COMPUTER NETWORK
March 2009 Model Update

GEORGE BRATTON, CIVIL ENGINEER
1252 S. Farragut Drive
Coupeville, Washington 98239

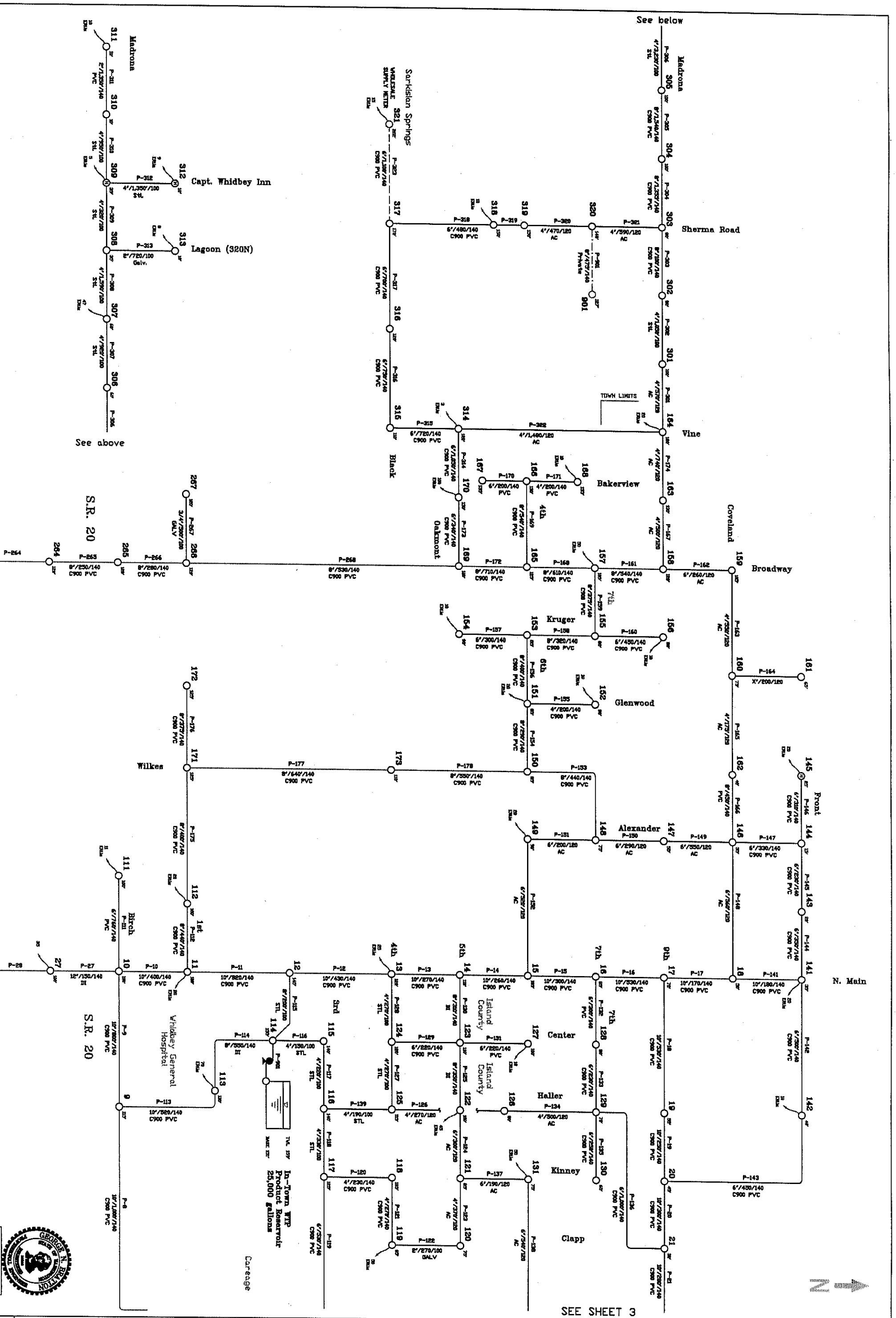

TOWN OF COUPEVEILLE
P. O. Box 725
Coupeville, Washington 98239

WATER DISTRIBUTION SYSTEM
COMPUTER NETWORK
March 2009 Model Update

GEORGE BRATTON, CIVIL ENGINEER
1252 S. Farragut Drive
Coupeville, Washington 98239

SEE SHEET 2

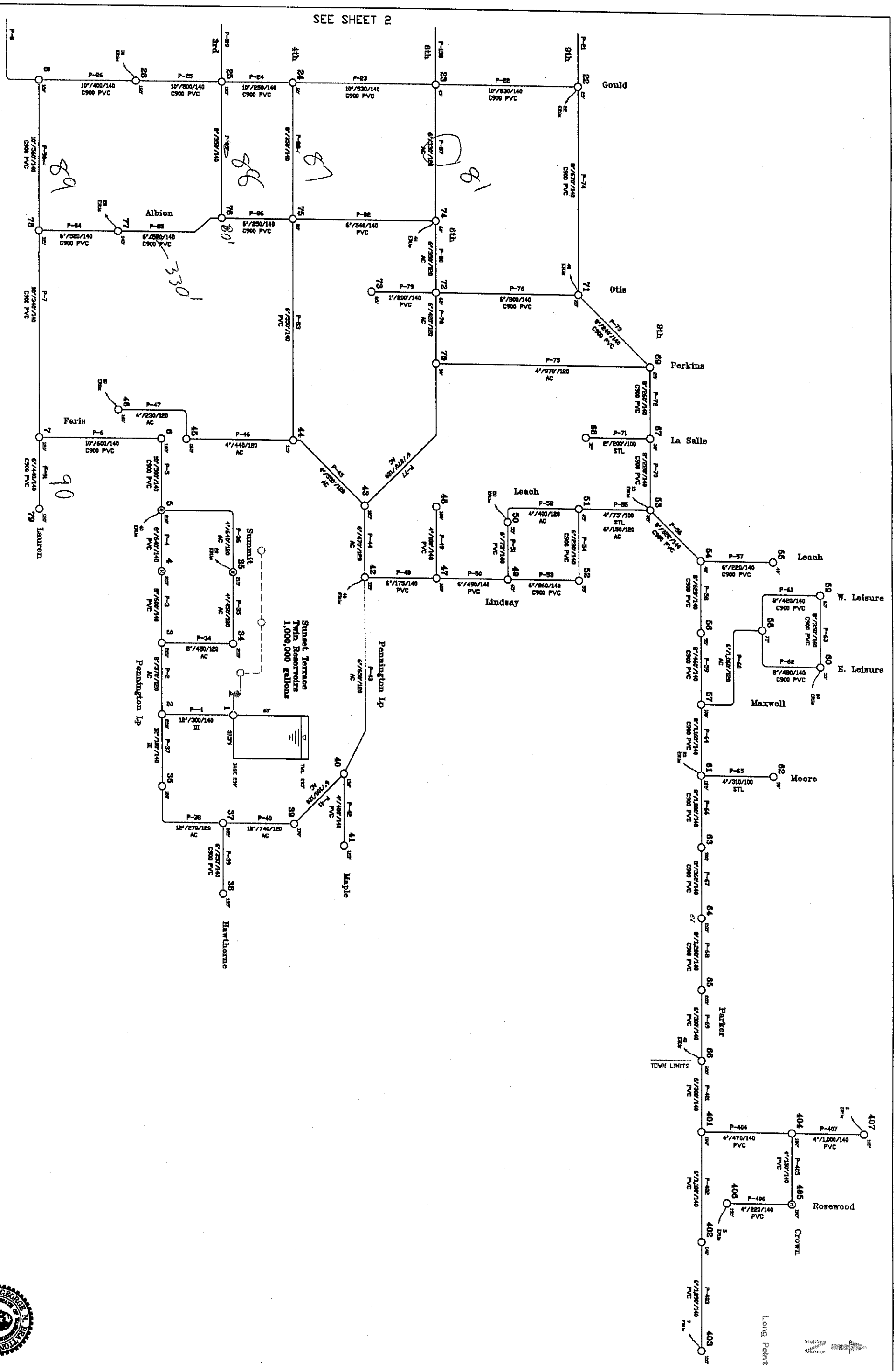

TOWN OF COUPEVEILLE P. O. Box 725 Coupeville, Washington 98239	WATER DISTRIBUTION SYSTEM COMPUTER NETWORK March 2009Model Update	GEORGE BRATTON, CIVIL ENGINEER 1252 S. Farragut Drive Coupeville, Washington 98239

SEE SHEET 2

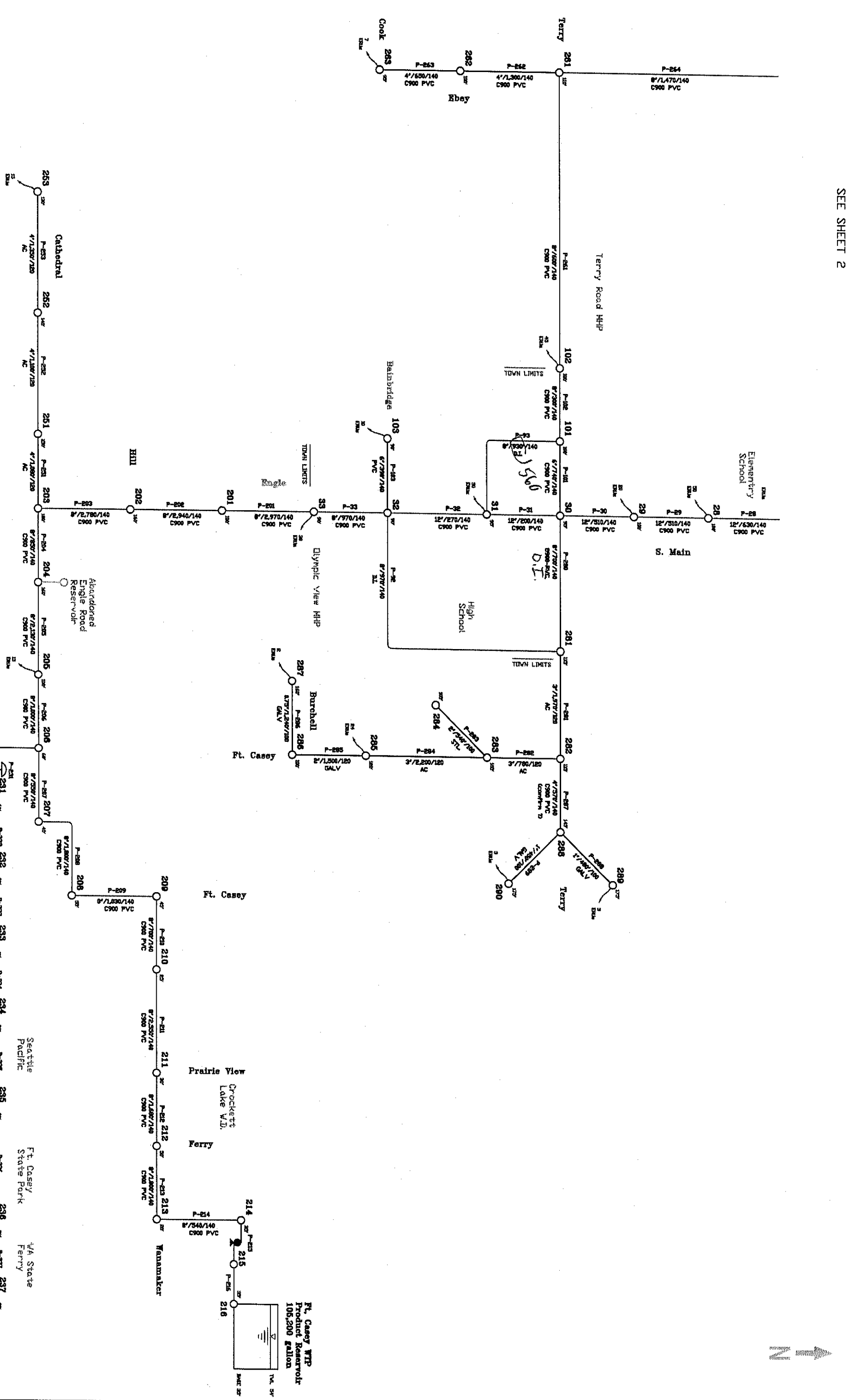

TOWN OF COUPEVEILLE
P. O. Box 725
Coupeville, Washington 98239

WATER DISTRIBUTION SYSTEM
COMPUTER NETWORK
March 2009 Model Update

GEORGE BRATTON, CIVIL ENGINEER
1252 S. Farragut Drive
Coupeville, Washington 98239

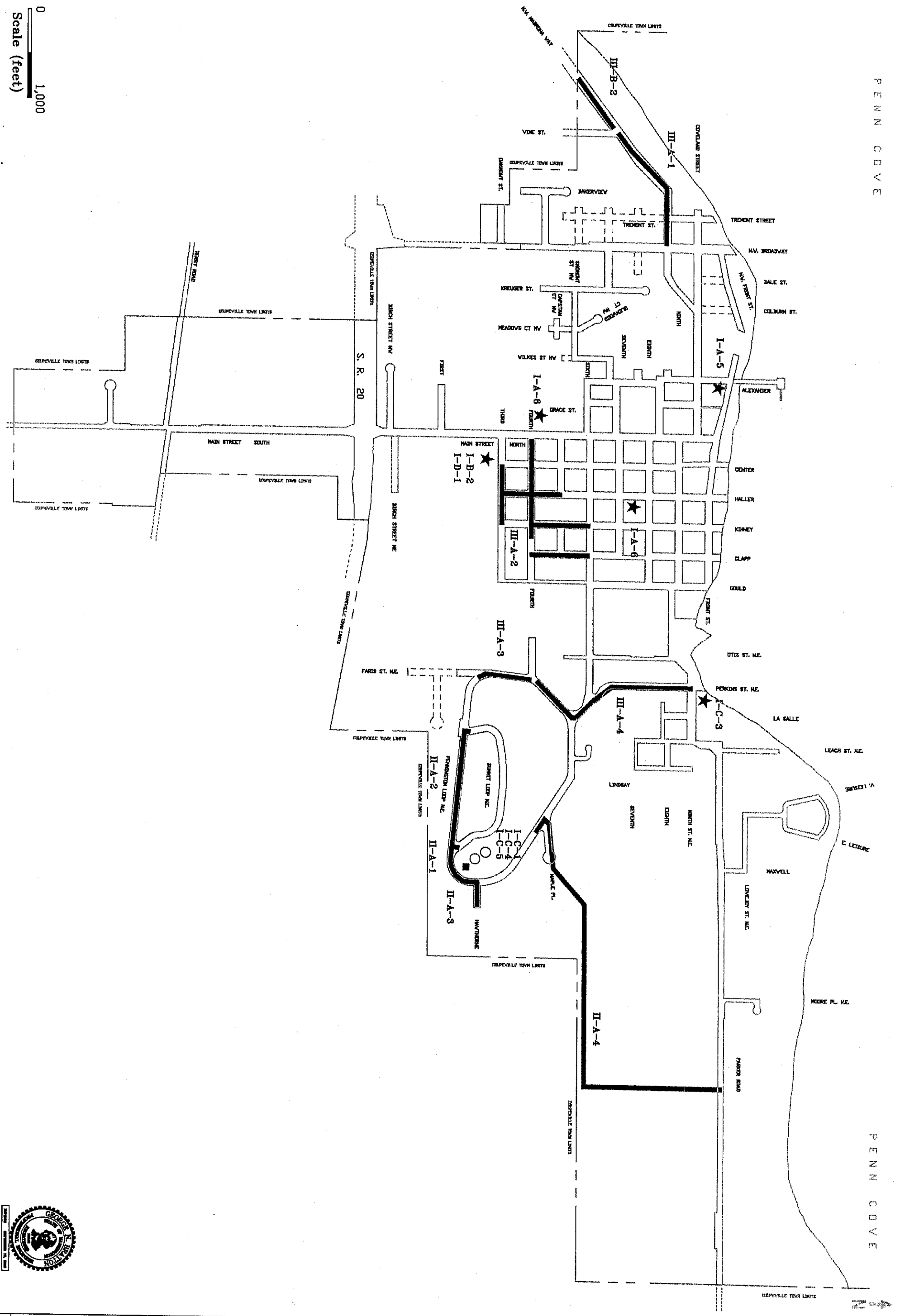

TOWN OF COUPEVEILLE P. O. Box 725 Coupeville, Washington 98239	WATER DISTRIBUTION SYSTEM CAPITAL IMPROVEMENT PROGRAM IN-TOWN SYSTEM	GEORGE BRATTON, CIVIL ENGINEER 1252 S. Farragut Drive Coupeville, Washington 98239

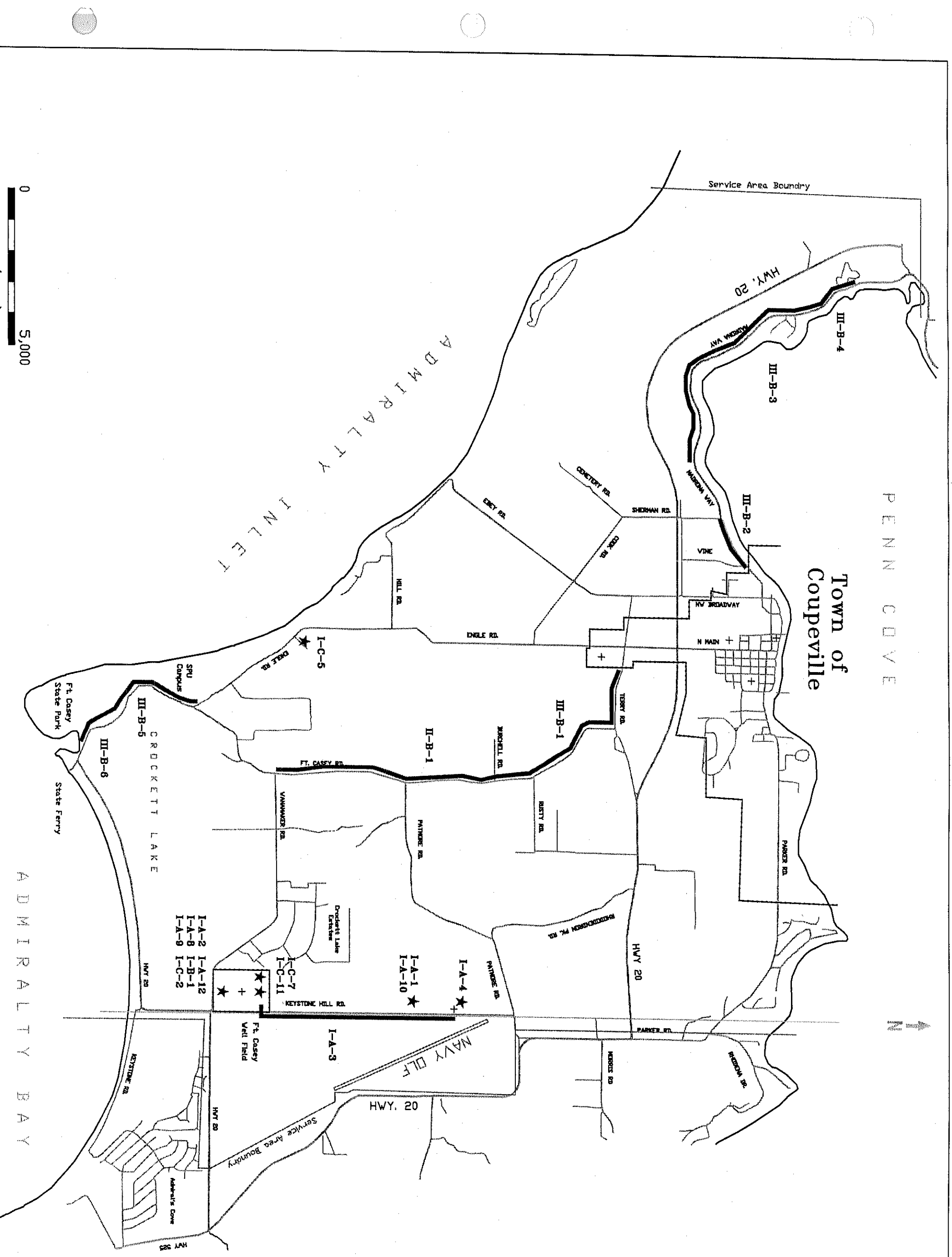

TOWN OF COUPEVEILLE P. O. Box 725 Coupeville, Washington 98239	WATER DISTRIBUTION SYSTEM CAPITAL IMPROVEMENT PROGRAM OUT-OF-TOWN SYSTEM	GEORGE BRATTON, CIVIL ENGINEER 1252 S. Farragut Drive Coupeville, Washington 98239

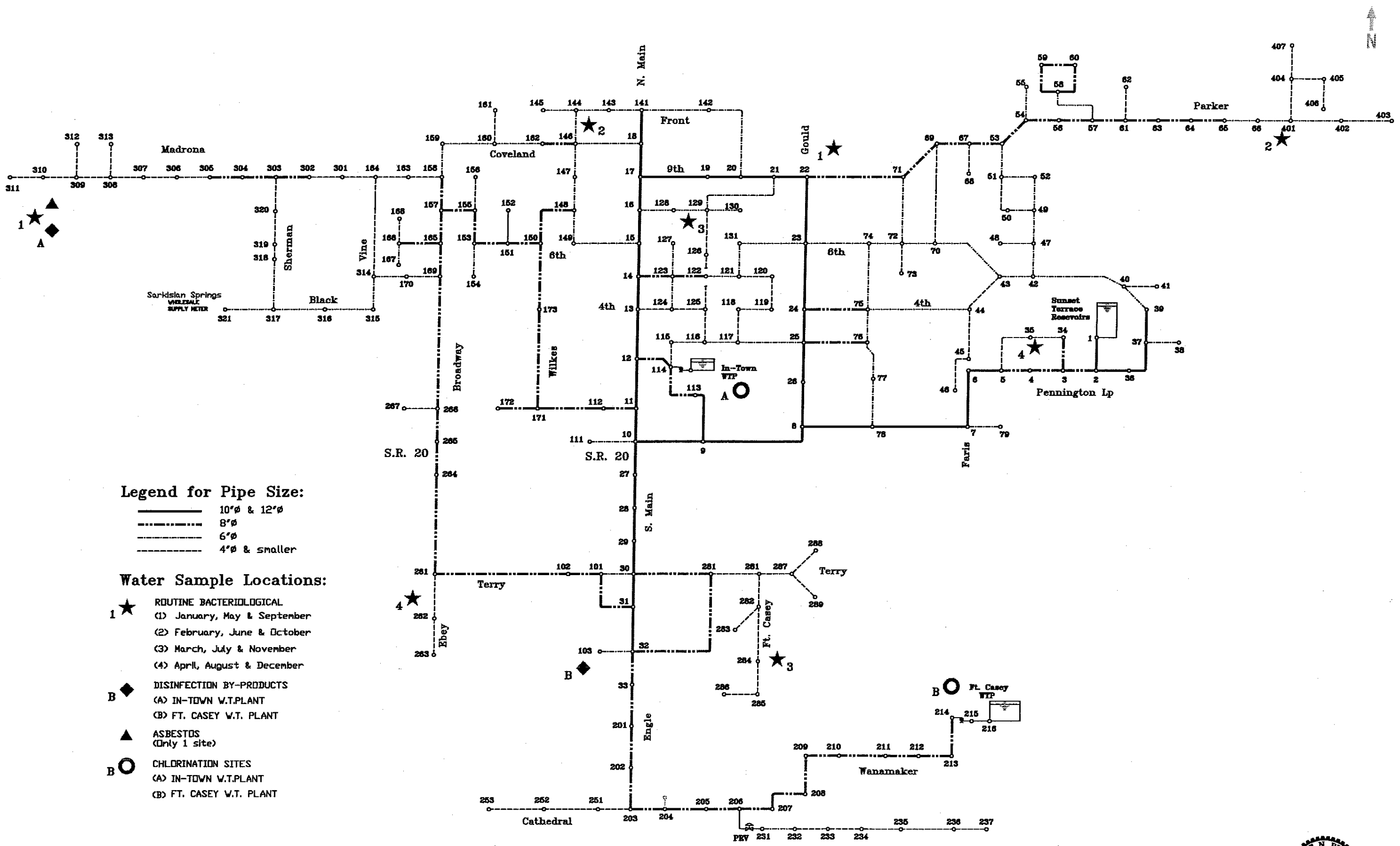

Legend for Pipe Size:

- 10"ø & 12"ø
- 8"ø
- 6"ø
- 4"ø & smaller

Water Sample Locations:

1 ★ ROUTINE BACTERIOLOGICAL
(1) January, May & September
(2) February, June & October
(3) March, July & November
(4) April, August & December

B ◆ DISINFECTION BY-PRODUCTS
(A) IN-TOWN W.T.PLANT
(B) FT. CASEY W.T. PLANT

▲ ASBESTOS
(Only 1 site)

B ○ CHLORINATION SITES
(A) IN-TOWN W.T.PLANT
(B) FT. CASEY W.T. PLANT

GEORGE BRATTON, CIVIL ENGINEER
1252 S. Farragut Drive
Coupeville, Washington 98239

WATER DISTRIBUTION SYSTEM
Water Quality Monitoring Sites
Routine Samples

TOWN OF COUPEVILLE
P. O. Box 725
Coupeville, Washington 98239

Appendix A

Applicable Correspondence

WA Department of Health
WA Department of Ecology
County Health Department

STATE OF WASHINGTON

DEPARTMENT OF HEALTH

20435 72nd Ave. S. , Suite 200, K17-12 • Kent, Washington 98032 -2358

February 1, 2008

MALCOLM BISHOP
COUPEVILLE, TOWN OF
PO BOX 725
COUPEVILLE, WA 98239

Subject: Town of Coupeville (ID#15550)
Island County
Source Approval for Well #1-06 in Ft. Casey Well Field
203-ft deep; SWL=6-ft MSL on 6/10/2006; 7.5hp pump; 45gpm
Approval Modification, 1,385 Approved Connections
Submittal # 07-0112

Dear Mr. Bishop:

The Department of Health and the Island County Health Department recently established a new process to review wells at risk to seawater intrusion. This letter revises my approval letter dated July 9, 2007. Source approval for Well #1-06 in the Fort Casey well field remains as previously written. The revision addresses a change in the number of approved connections.

Doug Kelly, the Island County Hydrogeologist, suggests that while Well #1-06 is at lower risk to seawater intrusion than other town wells, it is located in an area classified as high risk. Doug recommends limiting the increase in new connections to a maximum of 100 until new low risk sources are brought on-line. Therefore, this approval is modified to reflect an overall Town of Coupeville design approval for 1,385 service connections.

It is understood that the town has already received well site approval for a new well located in an area classified as low risk to seawater intrusion. Doug indicates that available data at this site suggests the aquifer is highly productive.

I apologize for missing this level of review with the first submittal. I regret any inconvenience this may have caused the town.

Sincerely,

Derek Pell

Derek M. Pell, PE
Assistant Regional Manager
NW Office of Drinking Water
Derek.pell@doh.wa.gov. 253/395-6763.

cc: Doug Kelly, Island County Health Department
Island County Assessor
George Bratton, P.E.
DOH - Erika Peterson, Aniela Sidorska

STATE OF WASHINGTON
DEPARTMENT OF HEALTH
20435 72nd Ave. S., Suite 200, K17-12 • Kent, Washington 98032 -2358

September 8, 2003

MALCOLM BISHOP
COUPEVILLE, TOWN OF
PO BOX 725
COUPEVILLE WA 98239

Subject: Town of Coupeville Water System, ID #15550
Island County
Water System Plan - APPROVAL
Submittal # 03-0510

Dear Mr. Bishop:

The Town of Coupeville water system plan, received in this office on May 12, 2003 with revisions submitted on September 8, 2003 has been reviewed and in accordance with the provisions of WAC 246-290-100, is hereby APPROVED.

Approval of this plan is granted through **September 8, 2009** unless the Department requests an update or plan amendment pursuant to WAC 246-290-100(9). Approval of this plan is valid as it relates to current standards outlined in WAC 246-290, revised April 1999. Future revisions in the rules may be more stringent and require facility modification or corrective action. Approval of the update of this water system plan is required on or before **September 8, 2009.**

This approval does not provide any guarantee and should not be considered to provide any guarantee concerning legal use of water or subsequent water rights decisions by the Department of Ecology.

This plan demonstrates how the Town of Coupeville will maintain financial viability.

This water system plan is consistent with the Public Water System Coordination Act (70.116 RCW) and the Island County Coordinated Water System Plan.

Standard Construction Specifications for distribution main extensions have been approved as part of this water system plan. With this approval and consistent with WAC 246-290-125(2) the Town of Coupeville may elect to proceed with the installation of distribution main extensions provided:

That the Town of Coupeville maintains on file completed construction completion reports (a copy of which is attached) in accordance with WAC 246-290-125 (2) and WAC 246-290-120 (5) and makes it available for review upon request by the department.

The following elements have also been approved as a part of the water system plan:

A Cross Connection Control Program in accordance with WAC 246-290-490

A Wellhead Protection Plan in accordance with WAC 246-290-135

A Water Quality Monitoring element including a Coliform Monitoring Program in accordance with WAC 246-290-300

Questions concerning water rights should be directed to the Department of Ecology.

DOH recognizes the significant effort and resource commitment involved in the preparation of your WSP document. Thank you for your cooperation. If you have any questions or wish to check our records, please feel free to contact either of us at the numbers listed below.

Sincerely,

Jolyn Leslie, PE
Regional Engineer
(253) 395-6763

Richard Rodriguez
Regional Planner
(253) 395-6771

att: *Construction Completion Report*

cc: Vin Sherman, Island County Health Dept.
Island County Planning
George Bratton, PE

September 4, 2007

Malcom Bishop
Public Works Director
Town of Coupeville
P.O. Box 725
Coupeville, WA 98239

RE: Sarkisian Springs Water Association

Dear Mr. Bishop,

I am writing to you as Secretary/Treasurer of the Sarkisian Springs Water Association, which operates a well and water system for several property owners in an area adjacent to Highway 20 just north of the Town limits of Coupeville.

As you may be aware, the state and county Departments of Health have advised our association to place a moratorium on new connections to our water system as a result of excessive chloride concentrations. They also advised our association to initiate efforts to secure an additional source of water supply in an effort to stabilize the aquifer that serves our well and to enable us to provide new water services to undeveloped lots owned by members of our association.

Recently, Scott Blouin met with you concerning the installation of a valve and tee in the Sherman Road water line improvement construction. You contacted the engineer for the project and also received approval from Mayor Conard for our association to pay for a valve and tee at the time of construction to defray costs. The valve and tee were installed and Sarkisian Springs was billed and paid for this to Lee Johnson and Sons Construction, Inc.

With this in mind, the Association is wondering if the possibility of a hookup to the Town water supply for supplemental water to Sarkisian Springs will indeed be available, and if so what the timeline will be. In addition, would the Town of Coupeville be interested in discussing a mutually attractive plan for providing supplemental water. Should the

Town be interested in providing supplemental water to our system, please contact me at the address below, or my email address is spsicscn@msn.com. I would appreciate a response to this request within thirty (30) days if convenient. Thank you for your consideration.

Sincerely,

Patty Blouin

Patty Blouin
Secretary/Treasurer for
Sarkisian Springs Water Association
P.O. Box 683
Coupeville, WA 98239

TOWN OF COUPEVILLE
4 NE Seventh
PO Box 725
Coupeville WA 98239
360.678.4461 FAX 360.678.3299

NANCY CONARD *Mayor*
MALCOLM BISHOP *Public Works Director*
LARRY KWARSICK *Town Planner*
LEONARD MARLBOROUGH *Town Marshal*
JUDY THOMAS *Clerk-Treasurer*

Patty Blouin
Sarkisian Springs Water Association
P. O. Box 683
Coupeville, WA 98239

RE: Town of Coupeville Supplying Water to Sarkisian Springs

Dear Mrs. Blouin:

This letter is in reply to your letter of September 4, 2007 inquiring about the Town's willingness to supply supplemental water to your community. We apologize for the delay in replying to your inquiry.

The Town can supply wholesale water to your public water system from the valve installed at your expense off the Town's 6-inch water main at Black Road and Sherman Road intersection. The wholesale supply would be through a 2-inch or smaller water meter and backflow prevention assembly. The meter and backflow prevention assembly size will be based on the estimated peak hour demand for the ultimate number of connections in your service area.

Since your well is assessed as a high risk category for seawater intrusion, the wholesale supply would be a replacement for, not a supplement to your existing well supply. Your well could be retained as an emergency supply provided that the well pump discharge line is physically disconnected (e.g., spool piece removed). With notification of the WA Department of Health, the well could be temporarily returned to service should there be a disruption of service from the Town.

Prior to providing a wholesale supply the Town will need to submit a project report to the WA Department of Health and WA Department of Ecology to show how the intertie will be made and demonstrate that the Town system has capacity to supply the ultimate number of customers in your system.

Your engineer will need to submit a design to the Island County Health Department to show how you will operate your system with the supply from the intertie and obtain approval for the water main installation from the Town meter to your distribution system or directly to your reservoir. A copy of this report would be included with the project report submitted by the Town to WA DOH and WA DOE.

The Association would need to purchase water shares (equity in the system) for the current number of connections (10 x $9,000), and pay the actual cost of the Town's meter and service to the west property line of Sherman Road. Thereafter, with each new customer, the Association would purchase an additional water share at the water share cost in effect at the time of the application for service.

The cost of water shares may be reduced by the granting of easements to the Town for the possible future extension of its distribution system, water storage reservoir, or other facilities. In particular, the Town is interested in installing a water main west on Wind Dance Place and Whale Run Place or Covey Run Place, then north to Madrona Way. The estimated value of the easement would be given as a credit towards the cost of purchase of water shares.

I would be pleased to meet with you to discuss this matter.

If you wish to proceed with the intertie please let me know and the Town will prepare the wholesale agreement.

Sincerely,

Malcolm Bishop
Public Works Director
Town of Coupeville

Cc Erika Peterson, WA DOH
Vin Sherman, Island County Health

February 23, 2009

Mr. Malcolm Bishop
Public Works Director
Town of Coupeville
P.O.Box 725
Coupeville, Wa. 98239

RE: Town of Coupeville supplying water to Sarkisian Springs Water Assoc.

In response to your letter of September 2008, the Sarkisian Springs Water Association wishes to proceed with obtaining wholsale water from the Town of Coupeville.

Would you please provide us with a draft Letter of Understanding outlining the tasks each party needs to complete before the agreement can be prepared? We will then obtain approval from our Board to sign the letter of understanding and proceed with the tasks needed to complete a draft agreement.

If you have any questions please contact me.

Sincerely,

Scott Blouin

Scott Blouin
President
Sarkisian Springs Water Assoc.
P.O.Box 683
Coupeville, Wa. 98239
(360) 929-6962

TOWN OF COUPEVILLE
4 NE Seventh
PO Box 725
Coupeville WA 98239
360.678.4461 FAX 360.678.3299

NANCY CONARD *Mayor*
MALCOLM BISHOP *Public Works Director*
LARRY KWARSICK *Town Planner*
DAVID PENROD *Town Marshal*
JUDY THOMAS *Clerk-Treasurer*

March 11, 2009

Mr. Scott Blouin
Sarkisian Springs Water Association
P. O. Box 683
Coupeville, WA 98239

TOWN OF COUPEVILLE WHOLESALE SUPPLY TO SARKISIAN SPRINGS
LETTER OF UNDERSTANDING

This letter is written to outline the framework for a Wholesale Agreement between the Town of Coupeville and the Sarkisian Springs Water Association. The following elements of the Agreement to be performed by each party are listed below.

Town of Coupeville

1. The Town will include in its *2009 to 2014 Water System Plan* the supply of wholesale water to Sarkisian Springs. The water system analysis in the Plan will demonstrate the ability to supply Sarkisian Springs with peak hour demand for the number of lots in the Sarkisian Springs service area (assumed as 15 lots).

2. The Town will supply the 1.5-inch displacement type water meter at the point of intertie between the two systems.

3. The Town will supply the quantity of water necessary to meet the peak hour demand for up to 15 single-family residential units (ERUs). The pressure at the intertie shall be not less than 30 psi under peak hour demand conditions.

Sarkisian Springs

4. Sarkisian Springs will obtain the services of a profession engineer to prepare the construction drawings for the water main extension from the intersection of Black Road and Sherman Road to the point of service (Town water meter) then beyond to the connection to the Sarkisian Springs reservoir. The plans shall delineate the portion of the water main extension to be turned over to the Town.

   The engineer shall prepare all plans and specifications to show the modifications to the Sarkisian Springs well, reservoir and pump station to connect and utilize the water from the intertie to fill the Sarkisian Springs reservoir. The engineer, or surveyor shall prepare a drawing and description of the easements for recording with the County Auditor referred to hereafter.

5. Obtain and record with the County Auditor all necessary easements from the Black Road and Sherman Road intersection to the existing Sarkisian Springs 6-inch water main at Madrona Heights and S.R. 20. The easement for the water main from the point of intertie to Black Road and Sherman Road shall be recorded in the name of the Town of Coupeville.

6. In accordance with the *Town's Standard Plans and Specifications for Water Main Installation,* install a 6-inch water main from the point of connection at Black Road and Sherman Road to the 6-inch water main at Madrona Heights and S.R. 20.

7. In accordance with the *Town's Standard Plans and Specifications for Water Main Installation,* install a concrete meter box and appurtenances for a 1.5-inch water meter (to be supplied by the Town). The meter installation shall be turned over to the Town.

8. In accordance with the *Town's Standard Plans and Specifications for Water Main Installation,* install a 1.5-inch double check valve assembly immediately downstream of the 1.5-inch water meter.

9. Upon connection to the Town's water supply, the connection to the Sarkisian Springs well shall be cutoff. The Sarkisian Springs well shall be either:

    a. Abandoned to WA Department of Ecology guidelines, or

    b. Given along with an easement to the WA Department of Ecology, or Island County for use as a monitoring well.

10. Obtain and record with the County Auditor easements in the name of the Town of Coupeville from the downstream end of the 6-inch water main intertie (1.5-inch water meter) through the Sarkisian Springs service area to Madrona Way for the future installation by the Town of a 6-inch water main.

11. Provide and record with the County Auditor an easement satisfactory to the Town on the Sarkisian Springs owned reservoir lot for a future Town water main and pump station.

12. Obtain and record with the County Auditor an easement satisfactory to the Town for a future extension of the Town's water system west along Whale Run Place from the 6-inch water main at Madrona Heights and S.R. 20 to the west end of the Sarkisian Springs service area.

Compensation

13. Sarkisian Springs will purchase from the Town ten water shares (equity in the Town's water system) at a cost of $90,000 (10 x $9,000 each).

14. The Town will purchase from Sarkisian Springs easements or options to purchase easements for the future extension of the Town's water system from Black Road, through easements or along the private roads within Sarkisian Springs, to Madrona Way. The value of the easements shall be determined by a property appraisal; the selection of the appraiser(s) shall be agreed upon by the Town and Sarkisian Springs.

15. The Town will purchase from Sarkisian Springs an easement or option to purchase an easement on the Sarkisian Springs reservoir lot for the Town's construction of a future reservoir and pump station.

16. Each party to this letter of understanding shall pay the cost of its attorney, engineers and other staff members.

17. The Town shall pay the fees for the appraisal of the value of the above referenced easement to be provided for the future extension of the Town's water system.

18. The Town shall charge Sarkisian Springs as the Town's customer the monthly service and reserve capacity charge for a 1.5-inch meter (currently $66.00 per month) and the monthly commodity rate as established in the Town Code and subsequently revised by Resolution of Town Council. Sarkisian Springs shall be changed the same rates and charges as retail customers in the out-of-Town service area.

Supporting Documents

19. The following attached drawings are incorporated into this letter of understanding:

    a. Water Distribution System, Supply to Sarkisian Springs, Site Plan

    b. Water Distribution System, Supply to Sarkisian Springs, Easements

Nothing in the Agreement to supply wholesale water shall preclude future agreements for:

- The Town to purchase the Sarkisian Springs water system and integrate the system into the Town's water system.
- The Town to contract with Sarkisian Springs to operate the system as a satellite manager.

Along with the Wholesale Agreement a Latecomer Agreement shall be provided to Sarkisian Springs for any service connection made to the 6-inch water main from Black Road and Sherman Road to the point of the intertie meter. The amount of reimbursement to Sarkisian Springs shall be established in the Latercomer Agreement. The Town will prepare both agreements.

Sarkisian Springs shall remain solely responsible for the operation and maintenance of its water system, including, but not limited to the supply of both domestic and fire flow from its reservoir and booster pump station to its customers.

We are willing to begin meeting with you to develop the final agreement. Please contact Malcolm Bishop, Pubic Works Director if you have any questions or wish to meet to discuss the items in this letter.

Sincerely,

Nancy Conard

Nancy Conard
Mayor

Cc Erika Lindsey, P.E., WA Department of Health
Keith Higman, Island County Health
Malcolm Bishop
George Bratton, P.E.

Appendix B

Water Right Permits

STATE OF WASHINGTON
DEPARTMENT OF ECOLOGY
Northwest Regional Office • 3190 160th Avenue SE • Bellevue, Washington 98008-5452 • (425) 649-7000

April 1, 2008

Malcolm Bishop
Public Works Director
Town of Coupeville
4 NE Seventh
P.O. Box 725
Coupeville, WA 98239

Dear Mr. Bishop:

Re: Provision in Water Right Change Applications CG1-*00845S, CG1-*01397C, CG1-*08242C, CG1-20359C, CG1-20378C

The intent of the provision referenced in your letter to Department of Ecology (Ecology) dated March 27, 2008, is to prevent seawater intrusion into the sole water resource from which the Town of Coupeville (Coupeville) withdraws its drinking water. The Intown wellfield is cause for great concern considering historical water quality reports showing the likelihood of seawater intrusion. Thus, the provision detailing taking Intown wells offline when new wells are completed in the Keystone wellfield is both appropriate and necessary to protect the resource. Further, if an Intown well is not being used as a monitoring well or an emergency supply, it must be decommissioned.

Consideration must be given to the following: production capability, water demand, the provision to take degradatory wells offline, and the requirement to remain within Coupeville's existing water right quantities (both annual and instantaneous).

Should Coupeville discover production from a new well is not equal to that of any well in the Intown wellfield, additional wells should be constructed to mitigate the loss of production that would occur should a particular Intown well be taken offline. However, since the limits of Coupeville's water rights can not be exceeded, I recommend constructing a well or wells with sufficient capacity such that no loss of production is realized. The combined total instantaneous quantity of all Intown wells should be transferred to the Keystone wellfield. The number of wells has no bearing on this; it is the pumping capacity as a whole that is important.

I structured Coupeville's water right application provisions to prevent degradation of the water resource and promote longevity of Coupeville's municipal water supply for its perpetual use. Please contact me at 425-649-4451 or at nphi461@ecy.wa.gov with any questions or concerns.

Sincerely,

Noel S. Philip
Hydrogeologist
Water Resources Program

np/mc

TOWN OF COUPEVILLE
4 NE Seventh
PO Box 725
Coupeville WA 98239
360.678.4461 FAX 360.678.3299

NANCY CONARD *Mayor*
MALCOLM BISHOP *Public Works Director*
LARRY KWARSICK *Town Planner*
DAVID PENROD *Town Marshal*
JUDY THOMAS *Clerk-Treasurer*

Noel Philip
Water Resources Office
Department of Ecology
Northwest Regional Office
3190-160th Ave.S.E.
Bellevue, WA 98008-542

March 27, 2008

Re: Condition in the Report of Examinations for Adding Points of Withdrawals to Water Rights

Dear Noel,

Further to our telephone conversation of March 21, 2008, this letter is written to confirm our understanding about Sentence 1 in Paragraph 2 on Page 2 of the Report of Examinations for adding points of withdrawals to the Town's various water rights.

Paragraph 2 stated "Each time a new well is constructed in Ft. Casey or Keystone well fields, Town of Coupeville will disconnect one In-Town well from the well system and either decommission the well per chapter 173-160 WAC or maintain the well as a monitoring well." Since this may result in a current high production In-Town well being decommissioned for use of a new lower production well, it is understood that the Town and WA DOE agree that this provision is inappropriate and will not be a condition of the changes to the Water Right Permits and Certificates.

Also, this same provision again stated in the Conclusions on Page 7 of the Report of Examinations will be disregarded as a condition on the Water Right Permits and Certificates.

It is the intention of the Town to decommission, or maintain as a monitoring well or emergency source the In-Town wells as soon as adequate supply is developed in the Keystone well field. In the mean time, as new sources of supply are developed in the northern portion of the Fort Casey well field and in the Keystone well field, the currently operating In-Town wells will be placed on standby operation as lag sources of water supply to meet maximum day demand. This will reduce the impact of the operation of the In-Town wells on seawater intrusion. The first wells to be decommissioned will be the four southern most wells (1-87 through 4-87) in the Fort Casey well field which are in a high risk location for seawater intrusion.

Please call me if you have any questions or if the above summary does not reflect our understanding on this issue.

Sincerely,

Malcolm Bishop
Public Works Director
Town of Coupeville

Cc Mayor Nancy Conard
Erika Peterson, WA DOH
Keith Higman, Island County Health
Doug Kelly, Island County Health
Doug Dow, Robinson, Noble and Saltbush ✓

STATE OF WASHINGTON
DEPARTMENT OF ECOLOGY

REPORT OF EXAMINATION
Change of: Add Points of Withdrawal
WRTS File #: CG1-20359C

PRIORITY DATE	CLAIM NO.	PERMIT NO.	CERTIFICATE NO.
November 20, 1972			G1-20359C

NAME
Town of Coupeville

ADDRESS/STREET	CITY/STATE	ZIP CODE
PO Box 725	Coupeville, WA	98239

PUBLIC WATERS TO BE APPROPRIATED

SOURCE
Coupeville Well Field Complex: In-town, Fort Casey, and Keystone Hill well fields.

TRIBUTARY OF (IF SURFACE WATERS)

MAXIMUM CUBIC FEET PER SECOND	MAXIMUM GALLONS PER MINUTE	MAXIMUM ACRE FEET PER YEAR
	210	190

TYPE OF USE, PERIOD OF USE
Municipal, year-round

LOCATION OF DIVERSION/WITHDRAWAL

APPROXIMATE LOCATION OF DIVERSION–WITHDRAWAL
Multiple locations within each well field.

LOCATED WITHIN (SMALLEST LEGAL SUBDIVISION)	SECTION	TOWNSHIP	RANGE [E. or W.] W.M.	WRIA	COUNTY
Coupeville Well Field Complex In-town Well Field: NE ¼ Keystone Hill Well Field: NE ¼, NE ¼ Fort Casey Well Field: NE ¼, SE ¼	In-town: 33 Keystone: 11 Ft. Casey: 14	In-town: 32 N. Keystone: 31 N. Ft. Casey: 31 N.	1 E.	6	Island

PARCEL NUMBER	LATITUDE	LONGITUDE	DATUM

RECORDED PLATTED PROPERTY

LOT	BLOCK	OF (GIVE NAME OF PLAT OR ADDITION)

LEGAL DESCRIPTION OF PROPERTY ON WHICH WATER IS TO BE USED
[Attachment 1 shows location of the authorized place of use and point(s) of diversion or withdrawal]

Town of Coupeville, WA service area documented in Water System Plan on file with WA State Dept. of Health.

DESCRIPTION OF PROPOSED WORKS

Town of Coupeville pumps water from multiple wells, updated and detailed in the water system plan on file with WA State Dept. of Health. Three well fields comprise the master well field, the Coupeville Well Field Complex. The water is treated to comply with government regulation and serve those within its established service area.

DEVELOPMENT SCHEDULE

BEGIN PROJECT BY THIS DATE	COMPLETE PROJECT BY THIS DATE	WATER PUT TO FULL USE BY THIS DATE
begun	December 31, 2027	December 31, 2027

Wells, Well logs and Well Construction Standards

1. All well construction shall proceed under the direction, and after issuance of, a Department of Ecology Preliminary Permit to Drill and Test a Well.

2. Each time a new well is constructed in Ft. Casey or Keystone well fields, Town of Coupeville will disconnect one In-town well from the well system and either decommission the well per chapter 173-160 WAC or maintain the well as a monitoring well. Those wells suitable for use as water production wells in case of emergency may remain connected to the system, but shall not be put to use at any time for typical water supply purposes.

3. All wells constructed in the State shall meet the construction requirements of chapter 173-160 WAC entitled "Minimum Standards for the Construction and Maintenance of Wells" and chapter 18.104 RCW titled "Water Well Construction".

Installation and maintenance of an access port as described in chapter 173-160 WAC is required. An air line and gauge may be installed in addition to the access port.

A completed well report of the well shall be submitted by the driller to the Department of Ecology within 30 days of completing the well authorized herein. All pump test data for the well shall be submitted to the Department as it is obtained.

Well #6 and Well 1-90 shall be tagged with a well identification number once proper documentation is filed and Ecology issues new numbers. New wells shall also be tagged with a well identification number. This unique well number shall remain attached to the well. Please reference this number when submitting data.

4. In accordance with chapter 173-160 WAC, wells shall not be located within certain minimum distances of potential sources of contamination. These minimum distances shall comply with local health regulations, as appropriate. In general, wells shall be located at least 100 feet from sources of contamination. Wells shall not be located within 1,000 feet of a solid waste landfill.

Measurements, Monitoring, Metering and Reporting

5. An approved measuring device shall be installed and maintained for each of the sources identified by this water right, and for any new wells constructed in the well fields described in this water right in accordance with the rule "Requirements for Measuring and Reporting Water Use", chapter 173-173 WAC.

6. Water use data shall be recorded daily. The maximum monthly rate of diversion/withdrawal and the monthly total volume shall be submitted to Ecology by January 31st of each calendar year. Ecology is requiring submittal of daily meter readings to collect seasonal information for water resource planning, management and compliance.

Municipal Supply and Public Water Systems

7. Prior to any new construction or alterations of a public water supply system, the State Board of Health rules require public water supply owners to obtain written approval from the Office of Drinking Water of the Washington State Department of Health. Please contact the Office of Drinking Water prior to beginning (or modifying) your project Northwest Drinking Water Operations, 20435 72nd Avenue S, Suite 200, K17-12, Kent, WA 98032-2358, (253) 396-6750.

Schedule and Inspections

8. Department of Ecology personnel, upon presentation of proper credentials, shall have access at reasonable times, to the records of water use that are kept to meet the above provisions, and to inspect at reasonable times any measuring device used to meet the above provisions.

9. Department of Ecology personnel, upon presentation of proper credentials, shall have access at reasonable times, to the project location, and to inspect at reasonable times wells or diversions and associated distribution systems for compliance with water law.

10. The water right holder shall file the notice of Proof of Appropriation of water (under which the superseding certificate of water right is issued) when the permanent distribution system has been constructed and the quantity of water required by the project has been put to full beneficial use.

The superseding certificate will reflect the extent of the project perfected within the limitations of the change authorization. Elements of the proof inspection may include, as appropriate, the source(s), system instantaneous capacity, beneficial use(s), annual quantity, place of use, and satisfaction of provisions.

General Conditions

11. The water source and/or water transmission facilities are not wholly located upon land owned by the applicant. Issuance of a water right change authorization by this department does not convey a right of access to, or other right to use, land which the applicant does not legally possess. Obtaining such a right is a private matter between applicant and owner of that land.

12. Use of water under this authorization shall be contingent upon the water right holder's maintenance of efficient water delivery systems and use of up-to-date water conservation practices consistent with established regulation requirements and facility capabilities.

FINDINGS OF FACT AND ORDER

Upon reviewing the investigator's report, I find all facts, relevant and material to the subject application, have been thoroughly investigated. Furthermore, I find the change of water right as recommended will not be detrimental to existing rights, provided the applicant complies with the above provisions.

Therefore, I ORDER the requested change to point of withdrawal under Groundwater Change Application No. CG1-20359C, subject to existing rights and the provisions specified.

You have the right to appeal this order to the Pollution Control Hearings Board. Pursuant to chapter 43.21B RCW, your appeal must be filed with the Pollution Control Hearings Board, and served on the Department of Ecology, within thirty (30) days of the date of your receipt of this order.

To appeal this order, your notice of appeal must contain a copy of the Ecology order you are appealing.

Your appeal must be filed with:
The Pollution Control Hearings Board
4224 - 6th Avenue SE, Rowe Six, Bldg. 2
P.O. Box 40903
Lacey, Washington 98504-0903

Your appeal must also be served on:
The Department of Ecology
Appeals Coordinator
P.O. Box 47608
Olympia, Washington 98504-7608

In addition, please send a copy of your appeal to:
Daniel Swenson, Section Manager
Water Resources Program
Department of Ecology
3190 160th Avenue SE
Bellevue, WA 98008

Signed at Bellevue, Washington, this 10th day of July, 2007.

Daniel Swenson, Section Manager
Water Resources Program
Northwest Region Office

BACKGROUND

Description and Purpose of Proposed Change

Town of Coupeville, Washington (Coupeville) submitted Groundwater Change Application CG1-20359C to the Department of Ecology to add points of withdrawal to Water Right Certificate CG1-20359C. Coupeville's current water rights (Table 1) cumulatively authorize 970 gallons per minute (gpm) and 606 acre-feet per year (afy) to serve their updated service area (Attachment 1). This is one of five change applications Coupeville submitted with the goal of consolidating its multiple points of withdrawal into a well field complex so as a municipality it can add back-up or additional points of withdrawal as needed. The new well field complex (point of withdrawal) occupies Sections 11, 14, and 33 in Townships 31N and 32N. Table 2 summarizes the current points of withdrawal written into each of Coupeville's certificates.

Statement of Authorities

RCW 90.03.570(1) and (2) state, that if specific conditions are fulfilled, a municipal water supplier is eligible for a change of water right as provided by RCW 90.03.380. This is true even if the right was not put to full beneficial use.
RCW 90.03.380(1) states that a water right that has been put to beneficial use may be changed. The point of diversion, place of use, and purpose of use may be changed if it would not result in harm or injury to other water rights.
RCW 90.44.100(2) requires that any well or wells added to a ground water permit must tap the same body of public ground water as the original well on the permit.
RCW 90.44.100(2) requires that the combined total withdrawal from the original well and any additional well shall not enlarge the right defined by the original permit or certificate.
RCW 90.03.386(2) states that a municipal water supplier may change its service area through the water system plan approval process. As long as the municipal water supplier is in compliance with the approved plan, the place of use for the water right is the service area of the plan.

Legal Requirements for Proposed Change

The following is a list of requirements that must be met prior to authorizing the proposed change in point of withdrawal.

- **Public Notice**
  Whidbey News Times, April 8 and 15, 2006
- **State Environmental Policy Act (SEPA)**
  Exempt

INVESTIGATION

Field Exam

Ecology personnel Noel S. Philip and Jerry L. Liszak toured the Coupeville Well Field and waterworks under the guidance of Malcolm Bishop, Public Works Director for Town of Coupeville. Bishop described Coupeville's course of action and the process by which the In-town wells would be converted to monitoring wells for resource protection purposes.

Philip and Liszak noted the locations of existing wells and well sites where well construction is planned. It was noted well tags missing at Well #6 and Well 1-90 shall require Coupeville to pursue new well tags through Ecology as a provision of the permit.

Proposed Use

Coupeville wishes to consolidate and add points of withdrawal to create a well field capable of hosting enough wells to fully perfect their rights. Coupeville's development is retarded by the threat of saltwater intrusion. Table 1 shows the certificates involved in this change event. Table 2 shows these certificates subject to change, and their current points of withdrawal.

The well field is necessary to provide Coupeville options in locating new well construction sites. Complications arising due to inadequate water availability, set back requirements, property ownership, and changing hydrogeologic conditions are possible. These conditions can limit the locations available to well construction.

Other Rights Appurtenant to the Place of Use

Three wells are within one half-mile of the In-town wells. If they have been in use coincidentally with Coupeville wells, their owners have not experienced, are not concerned, or are unaware of impairment, if any, occurring in their wells due to pumping of the Coupeville wells. It is unlikely continued use will impair these three wells. Coupeville's intention to phase out the In-town well field and convert the wells to monitoring and emergency production further supports that analysis.

The Department of Ecology Water Rights Application Tracking System (WRATS) shows no water rights of record within either of the quarter-quarter sections containing the Fort Casey and Keystone Hill well fields. The Ecology Well Log database and the Island County Hydrogeology database (March 2003) show 16 wells within a half-mile radius of Fort Casey well field, and 15 within proximity to the Keystone Hill well field. These potentially exempt wells may be tied to existing water right certificates or claims under a different name.

Table 1. Town of Coupeville Water Rights[1]

File #	Cert #	Priority Date	Qi (gpm)[2]	Qa (afy)[3]	Township Range Section[4]
G1-*00845SWRIS	880-D	1/1/1928	250	26	32.0N 01.0E 33
G1-*01397CWRIS	01174	3/3/1950	150	42	32.0N 01.0E 33
G1-*08242CWRIS	05618	8/11/1966	150	240	31.0N 01.0E 14
G1-20359CWRIS	G1-20359C	11/20/1972	210	190	32.0N 01.0E 33
G1-20378CWRIS	G1-20378C	11/20/1972	210	190	32.0N 01.0E 33

Notes:
1. Place of use is same on all certificates: Area served by Town of Coupeville
2. gpm = gallons per minute
3. afy = acre-feet per year
4. Location of certificated Point of Withdrawal.

The distance from the well sites in the Coupeville Well Field Complex to neighboring wells will likely buffer those nearby wells from pumping influence. However, well construction provisions to the permit require a preliminary permit to drill and test each new well. Approval shall not be issued until a proper evaluation of impairment has been made based on well location and estimated well yield. This provision provides an on-going evaluation of impairment by Coupeville wells on claims, certificates, and permits in the immediate area of each new well within the well field.

Table 2. Points of withdrawal subject to change per Coupeville water right applications.

Certificate #	Point of Withdrawal Issued By Certificate
880-D	Lot 10, Block 7 of Keister's Alteration Plat of Alexander-Glenwood Addition to Coupeville, WA
1174	Lot 3, Block 28, Thomas Coupe's Plat of Coupeville, T32N, R1E, S33
5618	Government Lot 5, S14, T31N, R1E, W.M.
G1-20359C	Lot 3, Block 28, Thomas Coupe's Plat of Coupeville, T32N, R1E, S33, W.M.
G1-20378C	NE1/4, NW1/4, SE1/4 and SE1/4, SW1/4, NE 1/4, S33, T32N, R1E, W.M.

Hydrologic and Hydrogeologic Evaluation

As noted by Easterbrook (1968), Whidbey Island is generally composed of unconsolidated Pleistocene glacial and interglacial deposits that overlie Tertiary and older bedrock. The Island County Groundwater Management Plan, Part A, Technical Memorandum, (GWMP) describes the groundwater flow system on Whidbey Island as a series of discontinuous water-bearing zones (sand and gravel aquifers) surrounded by zones of lower-permeable glacial sediments (silt, clay and till aquitards). All recharge to the system originates as rain falling on the surface of the island. Groundwater generally flows downward in the inland portions of the island then outward through the aquifers toward the coast and offshore. In these discharge areas, groundwater generally flows from deeper to shallower aquifer zones and then discharges to the sea where the aquifers intersect a cliff, beach face or ocean bottom.

The series of aquifers on Whidbey Island is complex, resulting from the deposition and erosion patterns created by at least three glaciation and three inter-glaciation periods. Although the USGS has designated five aquifer zones, termed 'A' (oldest) through 'E' (youngest), these zones are laterally discontinuous, vary in depth and thickness, and likely interconnected at various locations. Multiple aquifers exist at various places on Whidbey Island, but the two most common and subject to withdrawal by Coupeville are Aquifer C and Aquifer D. The degree of connection with marine waters is also likely variable. As a result, the effect of withdrawing groundwater from any particular depth and location could have widely variable impacts on nearby wells and on the potential for seawater intrusion.

Coupeville is a coastal town on central Whidbey Island. Evidence of saltwater intrusion has occurred along the coast in some areas, resulting in the need for Coupeville to begin producing water from sources farther inland not affected by seawater to promote aquifer longevity.

The point of withdrawal is located approximately 200 feet south of Penn Cove, Puget Sound on central Whidbey Island (Attachment 1). The well log and the geologic cross sections found in the *Coupeville Coordinated Water System Plan Regional Supplement* suggest the source of water is Aquifer C (sea level aquifer).

Aquifer C is the water-bearing unit associated with the Whidbey Formation. Easterbrook describes the Whidbey Formation as glacial deposits consisting of horizontally and cross-bedded layers of sand, silt, and clay with two distinct organic (peat) layers. Aquifer C commonly appears near sea-level on Whidbey Island. Aquifer D is the water-bearing unit associated with the Vashon Drift. Easterbrook describes the Vashon Drift as glacial deposits consisting of the Vashon Till and Esperance Sand including a few lenses of gravel, coarse sand, silt, and clay. Aquifer D appears intermittently at the higher elevations on Whidbey Island. The units are described as zones containing many small, separate aquifers; not one laterally continuous water-bearing zone. Table 3 shows the approximate depths in feet to hydrogeologic units in each section of the proposed well field complex.

Table 3. Depth in feet to aquifer in well field complex.

Section	Average Depth to Aquifer[1]	
	D	C
2	32	-87
11	48	-100
12	38	-6
13	-20	-96
14	-3	-75
33	-26	-116

Notes:

1. Determined by well log analysis and cross-sections in Coupeville Coordinated Water System Plan

Depths are approximate.

The greatest threat to groundwater in Coupeville is seawater intrusion. The potential for seawater intrusion relates to the elevation of the groundwater (or potentiometric surface) relative to sea level. Aquifers having little or no groundwater head above sea level are susceptible. Other factors such as recharge rate, pumping rate, aquifer transmissivity, hydraulic gradient, seasonal variation, and the geometry of the aquifer can influence the distribution and magnitude of seawater intrusion resulting from any particular withdrawal. Increasing concentrations of chloride in groundwater can be an indication of seawater intrusion. Unaffected groundwater in Coupeville generally contains a "background" chloride concentration between 10-20 mg/L. Concentrations of 100 mg/L or greater provide evidence of seawater intrusion unless other sources of chloride are present such as naturally occurring hard groundwater. Very hard groundwater is known to exist in the greater central Whidbey area. Island County has adopted a ranking system to determine whether groundwater quality is diminished due to saltwater intrusion, or occurs with high mineral content. *Island County Water Resources Management Plan: Saltwater Intrusion Topic Paper* (Kelly, 2005) details this discussion.

Coupeville pumps water continually to serve its municipal needs from its certificated points of withdrawal. It has done so for over fifty years. The issue of availability in this case is not the ability of the aquifer to continue to provide water into the future, but the necessity of suitably locating new wells for groundwater production to eliminate any potential for the freshwater-saltwater interface to advance inland. The Island County Health Department ranking system classifies numerous individual wells within one mile of the existing well fields as having a very high risk for seawater intrusion, resulting from a static water level below 8.4 feet MSL and chloride levels higher than 100 mg/L. These wells are mostly located along the western edges of Sections 2 and 11, and in Section 33. There are no known wells classified as medium to high risk within the Fort Casey or Keystone Hill well fields.

Precipitation is the only recharge source on Whidbey Island and it is probable the aquifers are hydraulically connected; pumping from one affects the other. Reports detailing hydrogeology show this; most notably in the Lagoon Point area on Whidbey Island. This interconnectivity allows both aquifers to serve as potential withdrawal depths within the same point of withdrawal, but it also raises impairment issues that require evaluation with the construction of each new well. Positioning wells in the proposed point of withdrawal where the available head above sea-level is highest provides greater security against seawater intrusion, but may impair wells fully penetrating either aquifer. For this reason, new wells must be drilled and tested under the direction of a Preliminary Permit issued by the Department of Ecology.

Impairment Considerations

Groundwater wells that are at greatest risk of potential impairment are those which are completed in the same aquifer zone as the subject well, located in close proximity to the subject well, and also located hydrogeologically down-gradient from the subject well. As water in the aquifer travels toward wells that are located down-gradient from the subject well, the subject well may potentially capture this water and impair the production of down-gradient wells. Also, surface water diversions located within a close proximity of the subject well may be impacted by the groundwater withdrawal, depending upon hydraulic continuity of the aquifer and surface water body. An arbitrarily, yet conservatively chosen area of one-half mile (1/2-mile) is used to define "close proximity." This value is justified experimentally based on current and historical pump test data that show negligible drawdown, and therefore unlikely impairment to wells or surface water diversions, induced by groundwater withdrawal at distances of 1000 feet in most cases. Furthermore, it is widely understood the aquifer systems in Coupeville are not laterally continuous, suggesting physical barriers exist in addition to limiting hydraulic conditions. Pumping at the Coupeville Well Field is not likely to cause impairment at neighboring wells.

Public Interest Considerations

Factors considered in determining whether this use of water is in the public interest include but were not limited to: consideration given to exempt wells; existing water right certificates, applications, and claims; potential impacts to the aquifer subject to withdrawal as it pertains to drawdown and water quality (i.e. sea-water intrusion); beneficial use of water as a resource defined in this report. No detriment to the public interest could be identified during the investigation of the subject application. Available data show existing wells in the area are not expected to be impaired by the anticipated operation of the subject well.

Consideration of Protests and Comments

No protests exist for this water right change application.

CONCLUSIONS

Coupeville can successfully drill new wells farther inland, where the groundwater elevation is highest, to adequately harvest enough groundwater to fully develop their water rights. Each new well location must be evaluated for water availability, impairment to water right holders, and potential for seawater intrusion to be deemed eligible for construction. As each new well is brought online, Coupeville shall decommission, convert to monitoring, or establish an In-town well as an emergency supply, and remove it from active duty.

RECOMMENDATIONS

Based on the above investigation, I recommend that the request for change to Water Right Certificate G1-20359C be authorized Dropdown field, click twice on field, in the amounts and within the limitations listed below and subject to the provisions beginning on Page 2, and following.

Purpose of Use and Authorized Quantities

210 gallons per minute, 190 acre-feet per year continuously, is a maximum limit and the water user may only use these amounts of water within the specified limit that is reasonable and beneficial.

Point of Withdrawal

Sections 2, 11, 12, 13, 14, Township 31 North, Range 1 East W.M.
Section 33, Township 32 North, Range 1East W.M.

Place of Use

As described on Page 1 of this Report of Examination.

Report by: _____ 07/05/2007

Noel S. Philip, LG
Hydrogeologist
Water Resources Program

Date

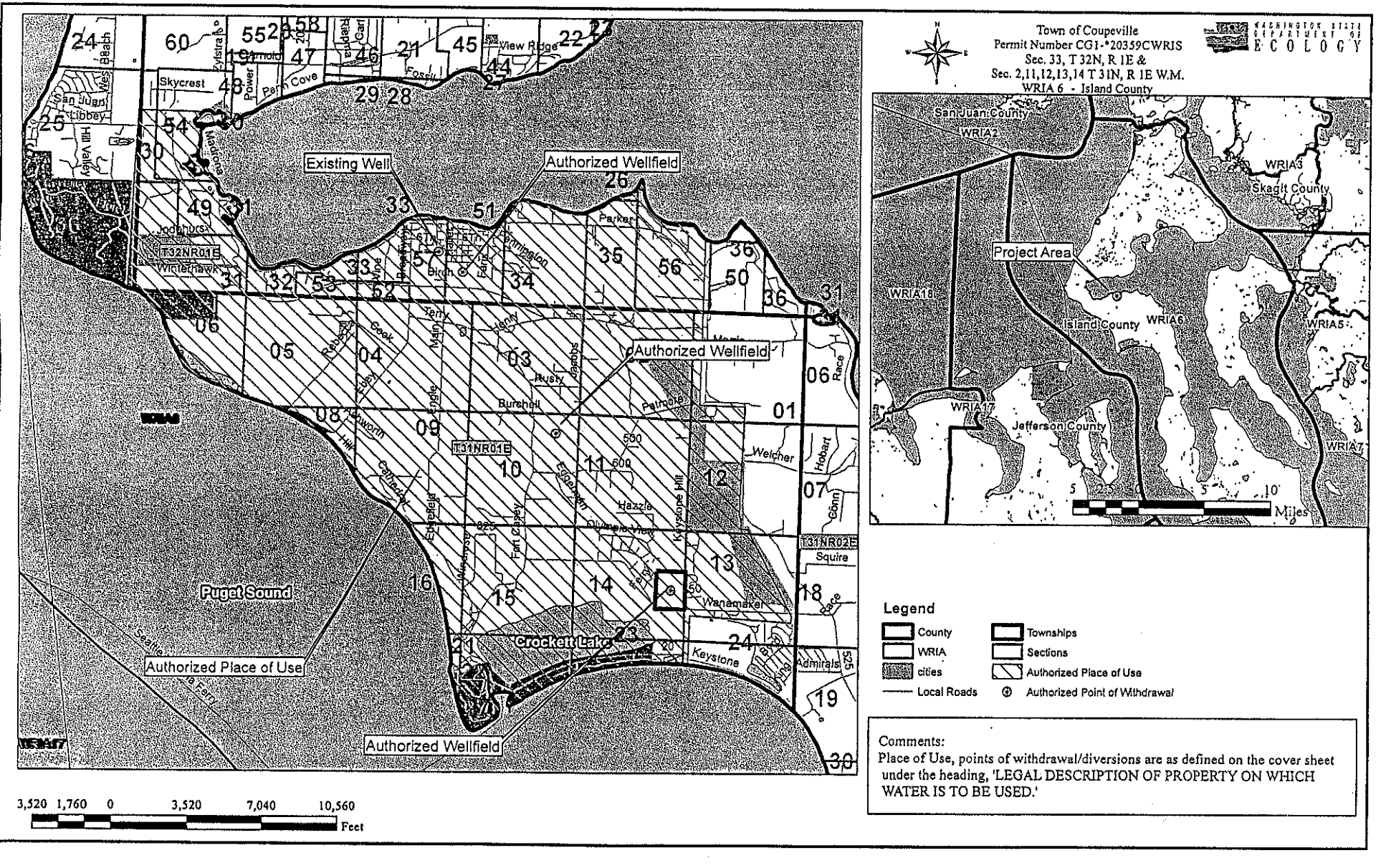

Comments:
Place of Use, points of withdrawal/diversions are as defined on the cover sheet under the heading, 'LEGAL DESCRIPTION OF PROPERTY ON WHICH WATER IS TO BE USED.'

Attachment 1

Appendix C

Well Site Approval

Note:

Only the well site approval letter for wells installed since 2003 (Well Nos. 1-06 and 1-08) are included. For other well site approvals refer to the 2003 to 2008 *Water System Plan* and previous plans.

ISLAND COUNTY PUBLIC HEALTH

P.O. Box 5000
Coupeville, WA 98239
www.islandcounty.net/health

2 November 2007

Town of Coupeville
ATTN: Malcolm Bishop, Public Works Director
P.O. Box 725
Coupeville, WA 98239

RE: Well Site Approval, Town of Coupeville Water System
(ID# 155509) Parcel # 13111-432-4450

Ladies and Gentlemen:

On 15 October 2007I sent you a letter granting conditional approval of the well site for the proposed new well for the Town water system. This office is now in receipt of a copy of the recorded covenant document. This completes the requirements for well site approval and the site is now approved.

Please feel free to contact me if you have any questions regarding this correspondence or the water system application process.

Sincerely,

Vincent R. Sherman, RS, MHS
Public Health Specialist

Cc: Erika Peterson, Washington State Department of Health
George Bratton, PE

ISLAND COUNTY PUBLIC HEALTH
ALWAYS WORKING FOR SAFER AND HEALTHIER COMMUNITIES

ISLAND COUNTY PUBLIC HEALTH

P.O. Box 5000
Coupeville, WA 98239
www.islandcounty.net/health

15 October 2007

Town of Coupeville
ATTN: Malcolm Bishop, Public Works Director
P.O. Box 725
Coupeville, WA 98239

RE: Well Site Approval, Parcel # R13111-432-4450

Ladies and Gentlemen:

I have inspected the site of the proposed well site on parcel R13111-432-4450. I find that the proposed site meets the requirements of 249-291 WAC subject to the following conditions:

> Well site approval is contingent upon the recording of a well protection covenant for a one hundred (100) foot pollution control radius around the well. Covenants serve to protect the drinking water supply from potential contamination. A Declaration of Covenant is required for the well site on parcel R13111-432-4450.
> A copy of the suggested document is enclosed for your convenience.
> Please provide a recorded copy of the document to this office after it has been recorded. Recording of the documents can be completed in the Island County Auditor's office.

The proposed well site is located in an area currently classified as being at low risk of seawater intrusion.

Please feel free to contact me if you have any questions regarding this letter.

Sincerely,

Vincent R. Sherman, RS, MHS
Public Health Specialist

Cc: Erika Peterson, Washington State Department of Health

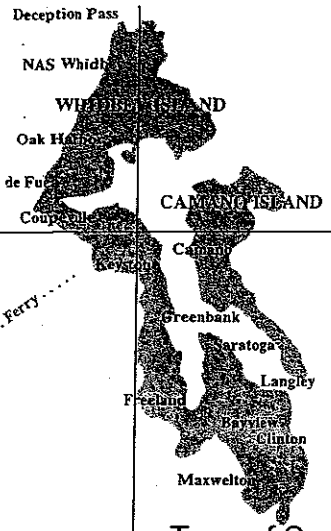

Island County Health Department

P.O. Box 5000 • Coupeville, WA 98239-5000

inistration / Environmental Health
E 6th Street – P.O. Box 5000
peville, WA 98239-5000
th Whidbey: 360 679-7350
th Whidbey: 360 321-5111 ext 7350
nano Island: 360 629-4522 ext 7350
: 360 679-7390

onal Health and Vital Statistics
N Main Street – P.O. Box 5000
peville, WA 98239-5000
th Whidbey: 360 679-7351
th Whidbey: 360 321-5111 ext 7351
nano Island: 360 629-4522 ext 7351
360 679-7347

h Whidbey Family Resource Center
NE 1st Avenue
Harbor, WA 98277
240-5554
360 679-6570

h Whi... Community Health Svcs
5 ...h Road
gley... ...60
221-8880
360 221-8480

nano Health Care Center
NE Camano Drive
nano Island, WA 98282
387-0184
360 387-6552

nano Annex
NE Camano Drive
nano Island, WA 98282
387-3443
360 387-6161

n Services
NE Haller – P.O. Box 5000
eville, WA 98239-5000
79-7350
60 679-7377

23 March 2006

Town of Coupeville
ATTN: Malcolm Bishop, Public Works Director
P.O. Box 725
Coupeville, WA 98239

RE: Well Site Approval, Parcel # R13114-250-4610

Ladies and Gentlemen:

I have inspected the site of the proposed well site 100 feet from the North and West property lines in the Northwest corner of parcel R13114-250-4610. I find that the proposed site meets the requirements of 249-291 WAC subject to the following conditions:

a. Well site approval is contingent upon the recording of a well protection covenant for a one hundred (100) foot pollution control radius around the well. Covenants serve to protect the drinking water supply from potential contamination. A Declaration of Covenant is required for the well site on parcel R13114-250-4610.
A copy of the suggested document is enclosed for your convenience. Please provide a recorded copy of the documents to this office after it has been recorded. Recording of the documents can be completed in the Island County Auditor's office.

b. The proposed well site is in an area that is classified as being at HIGH RISK of seawater intrusion. The well site, and proposed well, is exempt from the seawater intrusion review provisions of Island County Code 8.09 as long as the water withdrawal does not constitute increased water withdrawal and is not used for expanded use of the water system. We understand that the proposed well is intended to replace water already being withdrawn from other well(s). Expansion of the water system's water use would result in hydrogeologic review to evaluate seawater intrusion risk.

Please feel free to contact me if you have any questions regarding this letter.

Sincerely,

Vincent R. Sherman, RS, MHS
Environmental Health Specialist

Cc: Jolyn Leslie, PE, Washington State Department of Health

Appendix D

Well Pump Curves

Note:

Only the pump curves for wells installed since 2003 (Well Nos. 1-06 and 1-08) are included. For other pump curves refer to the 2003 to 2008 *Water System Plan* and previous plans, or the *Management and Operations Manual*.

MODEL 75S — 75 GPM — GRUNDFOS

FLOW RANGE
45 to 95 GPM

PUMP OUTLET
2" NPT

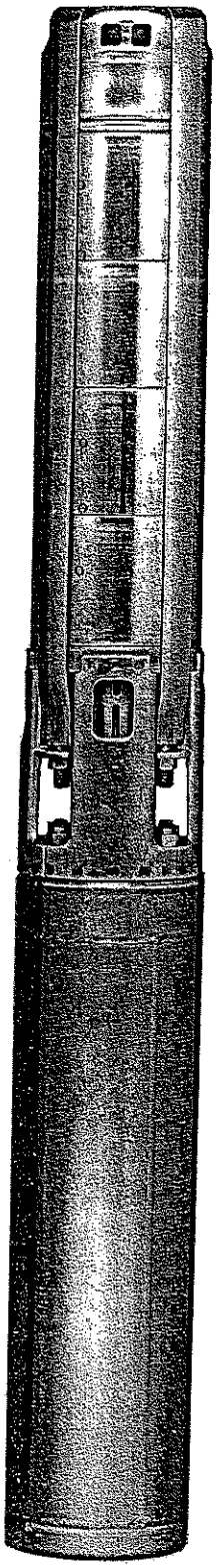

PERFORMANCE CURVES

Well 1-06
(upper Ft. Casey Well Field)

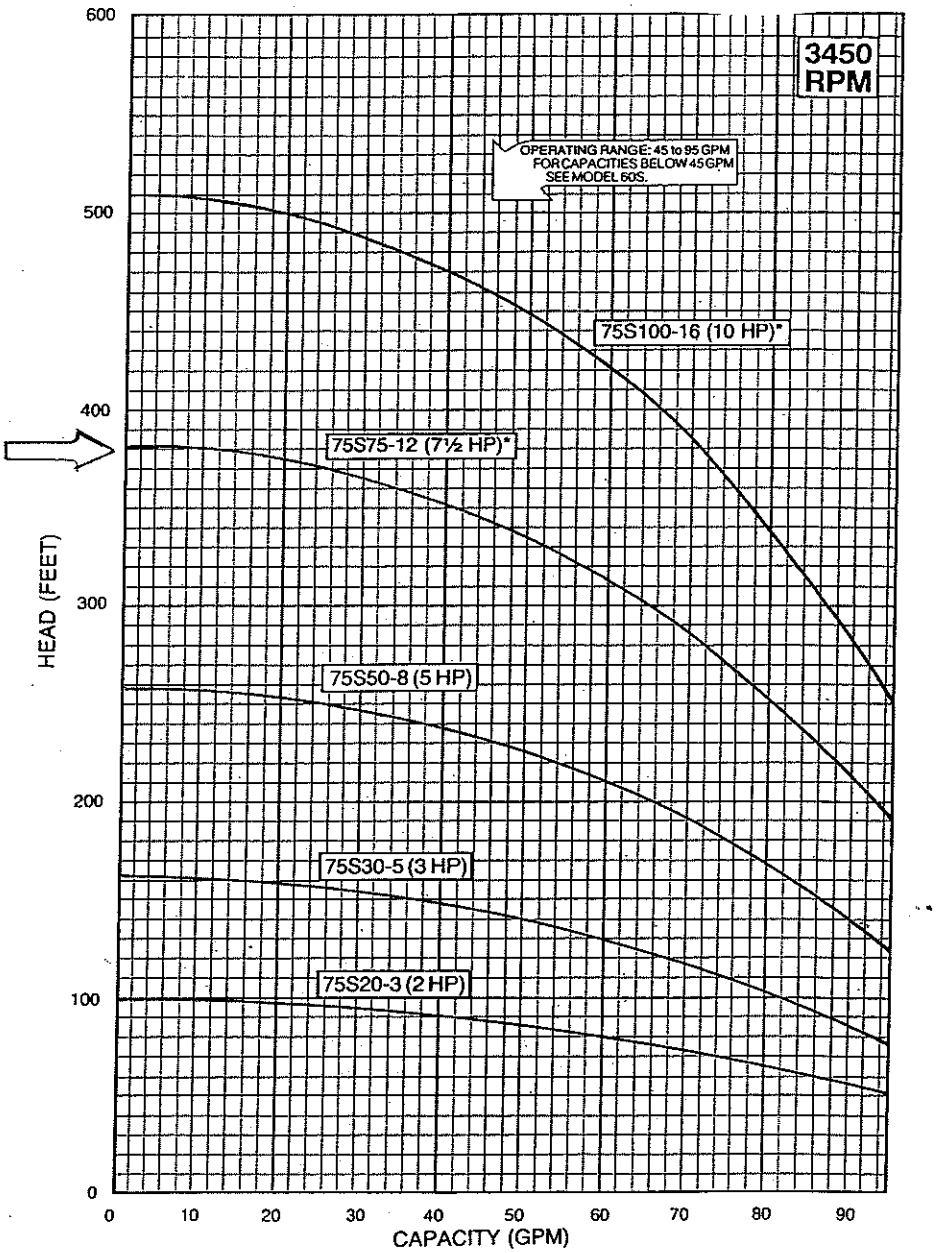

DIMENSIONS AND WEIGHTS

MODEL NO.	HP	LENGTH (INCHES)	WIDTH (INCHES)	APPROX. UNIT SHIPPING WT. (LBS.)
75S20-3	2	28 5/8	3 15/16	38
75S30-5	3	40 3/4	3 15/16	64
75S50-8	5	51 1/4	3 15/16	78
75S75-12	7½*	67 1/2	3 15/16	100
75S100-16	10*	92 1/8	3 15/16	155

Specifications are subject to change without notice.

* A 4-inch motor is provided as standard on these models.

MODEL 225S — 225 GPM — GRUNDFOS

FLOW RANGE
150 to 290 GPM

PUMP OUTLET
3" NPT

PERFORMANCE CURVES

Well 1-08
(Keystone Hill Road)

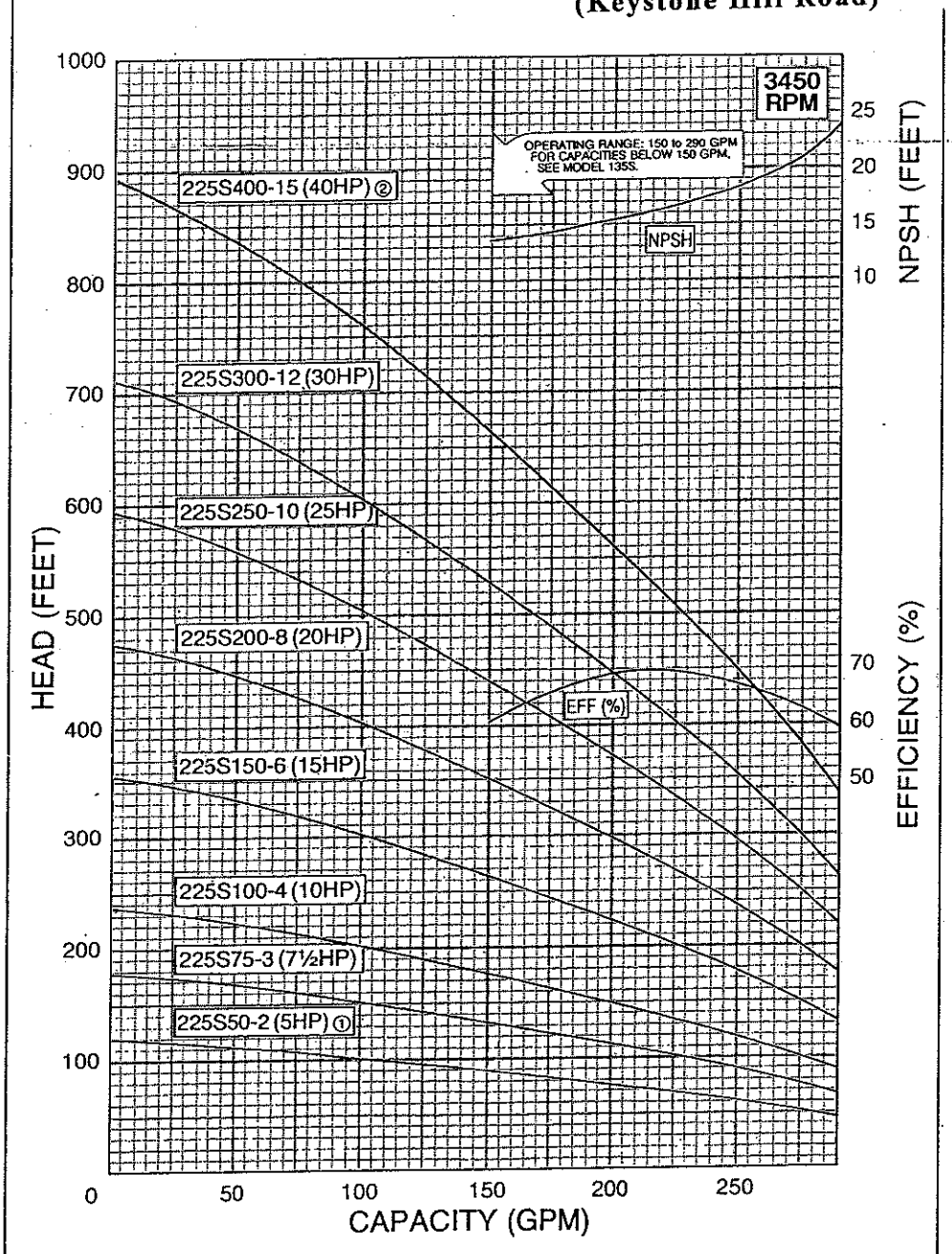

DIMENSIONS AND WEIGHTS

MODEL NO.	HP	MIN. WELL SIZE (INCHES)	LENGTH (INCHES)	MAX. WIDTH (INCHES)	APPROX. UNIT SHIPPING WT. (LBS.)
225S50-2	5①	6	43 3/8	5 5/8	86
225S75-3	7½	6	48 ½	5 ¾	133
225S100-4	10	6	54 3/8	5 ¾	145
225S150-6	15	6	64 ¾	5 ¾	174
225S200-8	20	6	75 ¼	5 ¾	195
225S250-10	25	6	85 5/8	5 ¾	221
225S300-12	30	6	96 7/8	5 ¾	260
225S400-15	40②	6	117 5/8	5 ¾	320

NOTES: ① 4-inch motor.

Appendix E

Well Logs

IN-TOWN WELLS

Table 11 - Drillers' logs of representative wells, Whidbey Island - Cont.

Materials	Thickness (feet)	Depth (feet)
32/1-32N1 - Continued		
Clay, sandy	5	160
Clay, gray	3	163
Sand, water-bearing (water-level, 87 ft)	1	164
Clay	19	183
Clay, sandy	8	191
Sand, water-bearing	26	217
32/1-33G1. Town of Coupeville. Altitude 25 ft. Drilled by N. C. Jannsen, 1928. Perforations, 146-198 ft.		
Hardpan	16	16
Clay and boulders	16	32
Sand, gravel, and boulders	16	48
Clay	15	63
Clay, blue	20	83
Clay, blue, and gravel	37	120
Clay, blue	26	146
Sand, water-bearing (100 gpm)	2	148
Clay and sand	10	158
Sand, coarse, and gravel	30	188
Gravel and boulders, cemented	10	198

Table 8 - Well records, Whidbey Island - Cont.

Well no.	Owner or tenant	Well: Alt. (feet)	Well: Depth (feet)	Well: Diam. (in.)	Water level below land surface: Feet	Water level below land surface: Date	Pump: Yield (gpm)	Pump: Draw-down (feet)	Use	Remarks
T. 32 N., R. 1 E. - Continued										
32R1	Mrs. Boston	202	9	48	0.89	7- 3-63	--	--	N	
33G1	Town of Coupeville	25	198	12	30	1948	100+	--	P	Standby supply. L, P.
					24.84	4- 9-64				
33H1	Robert Winder	82	12	48	1.31	6-25-63	--	--	N	
33J1	Town of Coupeville	92	240	10	84	12- 4-58	150p	15.25	P	Perforated from 109 to 215 ft. Noticeable iron. C, L, P.
					79	6-25-63				
					82	4-15-64				
34H1	Town of Coupeville	205	374	--	193	9-25-64	10p	118	X	L.
35E1	Herman Seiger	205	222	--	--	--	--	--	D	
35G1	Long Point Manor Water Co. (well 1)	105	192	6	97.98	6-25-63	20	--	P	G1 and G2 supply 35 families. Noticeable iron. P.
35G2	Long Point Manor Water Co. (well 2)	105	201	6	97	8-18-59	150p	--	P	G1 and G2 supply 35 families. Noticeable iron. L, P.
					98.97	6-25-63				
36E1	Lucille Whelan	22	44	48	8.72	6-25-63	--	--	D	
36E2	B. M. Reeder	20	32	48	13.96	6-25-63	--	--	D	

Table 8 - Well records, Whidbey Island - Cont.

Well no.	Owner or tenant	Well			Water level below land surface		Pump		Use	Remarks
		Alt. (feet)	Depth (feet)	Diam. (in.)	Feet	Date	Yield (gpm)	Draw-down (feet)		
T. 32 N., R. 1 E. - Continued										
32R1	Mrs. Boston	202	9	48	0.89	7- 3-63	--	--	N	
33G1	Town of Coupeville	25	198	12	30	1948	100+	--	P	Standby supply. L, P.
					24.84	4- 9-64				
33H1	Robert Winder	82	12	48	1.31	6-25-63	--	--	N	
33J1	Town of Coupeville	92	240	10	84	12- 4-58	150p	15.25	P	Perforated from 109 to 215 ft. Noticeable iron. C, L, P.
					79	6-25-63				
					82	4-15-64				
34H1	Town of Coupeville	205	374	--	193	9-25-64	10p	118	X	L.
35E1	Herman Seiger	205	222	--	--	--	--	--	D	
35G1	Long Point Manor Water Co. (well 1)	105	192	6	97.98	6-25-63	20	--	P	G1 and G2 supply 35 families. Noticeable iron. P.
35G2	Long Point Manor Water Co. (well 2)	105	201	6	97	8-18-59	150p	--	P	G1 and G2 supply 35 families. Noticeable iron. L, P.
					98.97	6-25-63				
36E1	Lucille Whelan	22	44	48	8.72	6-25-63	--	--	D	
36E2	B. M. Reeder	20	32	48	13.96	6-25-63	--	--	D	

32/1-33J1. Town of Coupeville. Altitude 92 ft.
Drilled by N. C. Jannsen, 1949. Perforations, 109-215 ft.

Hardpan	22	22
Clay and gravel, blue	11	33
Hardpan with gravel	20	53
Hardpan layers, clayey	18	71
Clay, blue	47	118
Clay and gravel streaks, some water	9	127
Sand and gravel	15	142
Sand and gravel with clay	13	155
Clay, green	14	169
Sand and gravel	5	174
Clay, sandy	16	190
Sand and gravel, water-bearing	23	213
Clay and sand	27	240

32/1-34H1. Town of Coupeville. Altitude 205 ft.
Drilled by Lambert Vander Stoep, 1964. Screen, 14-slot, 311-316 ft.

Topsoil	1	1
Clay	2	3
Sand and gravel	127	130
Sand and some gravel	32	162

WELL # 2 - HALLER PARK
Monitoring well for
Well #4

8" well (Coupeville) Playfield area - 1967 Jul

Test Pumped @ 175 G.P.M with 50' DD
(pumped 2 days)

Clay and Sandy Clay
Water Sand/gravel 185' to 208'
Screen - 10' of # 12 slot
10 of # 14 slot
22' total screen with fitt

Static level 77 ft 4 SCREENS

208 deep

Tested @ 175 G.P.M. with 50' D.D.

3.80 GPM P.F.D.D. WHEN DRILLED

S - 91'
DD - 126.5'
35.5'
@ 145 GPM = 4.08 GPM P.F.D.D. 7/89

190 TO 242 GPM ADDITIONAL CAPACITY ?

WELL #4
HALLER PARK

WHIDBEY WELL DRILLERS

Dennis Faber
1143 West Ft. Nugent Road
Oak Harbor, Washington 98277
Phone 675-1271

#5

WATER WELL OWNER : Coupeville - "STORE"

ADDRESS : (DEAN MANOR)

WELL LOCATION : "STORE"

DATE DRILLED : Aug 1969

WELL DEPTH : 270' deep

GALLONS PER MINUTE : 200 G.P.M when drilled.

STATIC LEVEL : 102

SCREENS INSTALLED : 6 Screen 239' TO 270'

SURFACE SEAL : NA

WELL LOG OR INFORMATION:

WATER IN S/G MIX 236' TO 270'

1.65 GPM · AT FOOT DRAW DOWN
(230 GAL MIN)
MAX 1969

WELL DRILLED BY: WHIDBEY WELL DRILLERS
OAK HARBOR, WASHINGTON 98277
CONTRACTORS NO. WHIDBWD 289 MM
WASHINGTON DRILLER LICENSE NO. 129
DENNIS FABER, OWNER

SIGNED DATE

8" Well (Reliance Store) Aug 1969

270' deep cut off 2' (268' deep from Top of Casing

Clay 0 - 21
Hard 21 - 88
Sand 88 - 94
Clay 94 - 210

Water Sand 210 - 216
Sandy Clay 216 - 218
fine Sand 218 - 236 (water sand)
Water Sand 236 - 267 (Better water sand)
267 - 269 Clay chunks in sand
270 - dead acting formation (non bottom of layer)

Static level 101

~~270~~ 268' deep

235' Casing

Stainless Screens 15' of # 10 slot
15' of # 12 slot

1.65 G.P.M. P.F.D.D.

(200 GPM MAX)

5 - 110.5'
DD - 216.0'
105.5
7/69 @ 171 GPM = 1.62 GPM P.F.D.D.

7/69 23' TO STABE
7/61 12.5' TO STABE
6 SCREENS TOTAL

WELL #5

WELL No. 1

File Original and First Copy with Department of Ecology
Second Copy — Owner's Copy
Third Copy — Driller's Copy

WATER WELL REPORT
STATE OF WASHINGTON

Start Card No. W100669
UNIQUE WELL I.D. # ABY 399
Water Right Permit No. Replaces old #5

(1) OWNER: Name Town of Coupeville Address P.O. Box 725 - Coupeville

(2) LOCATION OF WELL: County Island NW 1/4 SE 1/4 Sec 33 T. 32 N. R 1E W.M.

(2a) STREET ADDRESS OF WELL (or nearest address) Main St. - Coupeville - Well #5

(3) PROPOSED USE: [1] Domestic [ ] Industrial [ ] Municipal [ ] Irrigation [ ] Test Well [ ] Other [ ] DeWater

(4) TYPE OF WORK: Owner's number of well (If more than one) 2
Abandoned [ ] New well [1] Method: Dug [ ] Bored [ ] Deepened [ ] Cable [1] Driven [ ] Reconditioned [ ] Rotary [1] Jetted [ ]

(5) DIMENSIONS: Diameter of well 8" inches. Drilled 270 feet. Depth of completed well 270 ft.

(6) CONSTRUCTION DETAILS:
Casing installed: 8" Diam. from 0 ft. to 240 ft.
Welded [1] " Diam. from ft. to ft.
Liner installed [ ] " Diam. from ft. to ft.
Threaded [ ]

Perforations: Yes [ ] No [1]
Type of perforator used
SIZE of perforations in. by in.
perforations from ft. to ft.
perforations from ft. to ft.
perforations from ft. to ft.

Screens: Yes [1] No [ ]
Manufacturer's Name Johnson
Type SS Model No. 304
Diam. 8 Slot size 10, 12, 14 from 240 ft. to 255 ft.
Diam. 8 Slot size 15 from 256 ft. to 270 ft.

Gravel packed: Yes [ ] No [1] Size of gravel
Gravel placed from ft. to ft.

Surface seal: Yes [1] No [ ] To what depth? 18± ft.
Material used in seal Bentonite
Did any strata contain unusable water? Yes [ ] No [1]
Type of water? Depth of strata
Method of sealing strata off

(7) PUMP: Manufacturer's Name Goulds
Type: Sub Turbine H.P. 30

(8) WATER LEVELS: Land-surface elevation above mean sea level Goulds ft.
Static level 103 ft. below top of well Date
Artesian pressure lbs. per square inch Date
Artesian water is controlled by (Cap, valve, etc.)

(9) WELL TESTS: Drawdown is amount water level is lowered below static level
Was a pump test made? Yes [1] No [ ] If yes, by whom? DRILLER
Yield: 300± gal./min. with 98 ft. drawdown after 1/4 hrs.
" " " "
" " " "

Recovery data (time taken as zero when pump turned off) (water level measured from well top to water level)

Time	Water Level	Time	Water Level	Time	Water Level

Date of test
Bailer test gal./min. with ft. drawdown after hrs.
Airtest gal./min. with stem set at ft. for hrs.
Artesian flow g.p.m. Date

(10) WELL LOG or ABANDONMENT PROCEDURE DESCRIPTION

Formation: Describe by color, character, size of material and structure, and show thickness of aquifers and the kind and nature of the material in each stratum penetrated, with at least one entry for each change of information.

MATERIAL	FROM	TO
Grey Clay	0	23
Grey / Clay & Gravel	24	90
Brown / SAND	91	96
Grey CLAY	97	212
Grey / Water SAND	213	217
Grey SANDY CLAY	218	234
Grey Dirty Fine SAND	235	239
Fine Water SAND	240	255
Coarse SAND	256	270
Grey CLAY	271	—

Work Started 3/15 19 Completed 5-4 2000

WELL CONSTRUCTOR CERTIFICATION:

I constructed and/or accept responsibility for construction of this well, and its compliance with all Washington well construction standards. Materials used and the information reported above are true to my best knowledge and belief.

NAME WELL DONE DRILLERS (PERSON, FIRM, OR CORPORATION) (TYPE OR PRINT)
Address 440 Hill Valley Dr
(Signed) Jack E Harris (WELL DRILLER) License No. 1304
Contractor's Registration No. WELLDO*025BN Date 5-4 19 00

(USE ADDITIONAL SHEETS IF NECESSARY)

Ecology is an Equal Opportunity and Affirmative Action employer. For special accommodation needs, contact the Water Resources Program at (206)

File Original and First Copy with Department of Ecology
Second Copy — Owner's Copy
Third Copy — Driller's Copy

WATER WELL REPORT
STATE OF WASHINGTON

Application No. .....
Permit No. .....

(1) OWNER: Name Town of Coupeville Address [illegible]

(2) LOCATION OF WELL: County Island SW ¼ NE ¼ Sec. 3 T. 31 N., R. 1E W.M.

...ing and distance from section or subdivision corner

(3) PROPOSED USE: Domestic ☐ Industrial ☐ Municipal ☑ Irrigation ☐ Test Well ☐ Other ☐

(4) TYPE OF WORK: Owner's number of well (if more than one) 4 ??
New well ☑ Method: Dug ☐ Bored ☐
Deepened ☐ Cable ☑ Driven ☐
Reconditioned ☐ Rotary ☑ Jetted ☐

(5) DIMENSIONS: Diameter of well 8 inches.
Drilled 520 ft. Depth of completed well 520 ft.

(6) CONSTRUCTION DETAILS:
Casing installed: 8" Diam. from 0 ft. to 485 ft.
Threaded ☐ ..... " Diam. from ..... ft. to ..... ft.
Welded ☐ ..... " Diam. from ..... ft. to ..... ft.

Perforations: Yes ☐ No ☑
Type of perforator used .....
SIZE of perforations ..... in. by ..... in.
..... perforations from ..... ft. to ..... ft.
..... perforations from ..... ft. to ..... ft.
..... perforations from ..... ft. to ..... ft.

Screens: Yes ☑ No ☐
Manufacturer's Name Howard Smith Screw Co.
Type Stainless Model No. 304
Diam. 8 Slot size 30 from 500 ft. to 511 ft.
Diam. 8 Slot size 25 from 511 ft. to 520 ft.

Gravel packed: Yes ☐ No ☑ Size of gravel: .....
Gravel placed from ..... ft. to ..... ft.

Surface seal: Yes ☑ No ☐ To what depth? 18+ ft.
Material used in seal Bentonite / Cement
Did any strata contain unusable water? Yes ☐ No ☐
Type of water? ..... Depth of strata .....
Method of sealing strata off .....

(7) PUMP: Manufacturer's Name .....
Type: ..... H.P. .....

(8) WATER LEVELS: Land-surface elevation above mean sea level 100+- ft.
Static level 85 ft. below top of well Date 8/31/91
Artesian pressure ..... lbs. per square inch Date .....
Artesian water is controlled by ..... (Cap, valve, etc.)

(9) WELL TESTS: Drawdown is amount water level is lowered below static level
Was a pump test made? Yes ☐ No ☑ If yes, by whom? .....
Yield: gal./min. with ft. drawdown after hrs.
" " " "
" " " "

Recovery data (time taken as zero when pump turned off) (water level measured from well top to water level)

Time	Water Level	Time	Water Level	Time	Water Level

...ate of test .....
... test ... gal./min. with ..... ft. drawdown after ..... hrs.
Artesian flow ..... g.p.m. Date .....
Temperature of water: ..... Was a chemical analysis made? Yes ☐ No ☐

(10) WELL LOG: WELL #6

Formation: Describe by color, character, size of material and structure, and show thickness of aquifers and the kind and nature of the material in each stratum penetrated, with at least one entry for each change of formation.

MATERIAL	FROM	TO
Topsoil	0	½
HARD Gray Clay	½	121
SAND Clay	122	138
(Alternating) HARD Clay + Shale	139	383
Fine Water SAND	384	395
Gray HARD Clay	396	437
(no brace) Water Bearing Clay + Gravel mix	438	474
HARD Clay, Shale	475	485
Heaving Fine Water SAND - some gravel	486	
— lots wood chips —		520

RECEIVED
SEP 23 1991
TOWN OF COUPEVILLE
TREASURER - CLERK

Slot 20 - 500-501
" - 18 500 440
" 15 484-485
"
7 screens - total

Work started 7/18, 1991 Completed 8/30, 1991

WELL DRILLER'S STATEMENT:

This well was drilled under my jurisdiction and this report is true to the best of my knowledge and belief.

NAME [illegible] (Person, firm, or corporation) (Type or print)

Address [illegible]

[Signed] [illegible] (Well Driller)

License No. 1304 Date 9/1, 1991

(USE ADDITIONAL SHEETS IF NECESSARY)

ECY 050-1-20

Well No. 6

FORT CASEY WELL FIELD AND KEYSTONE HILL ROAD

File Original and First Copy with Department of Ecology
Second Copy — Owner's Copy
Third Copy — Driller's Copy

WATER WELL REPORT

STATE OF WASHINGTON

Permit No. ....

(1) OWNER: Name City of Coupeville Address 4 Seventh Street P.O. 725 Coup. 9823

(2) LOCATION OF WELL: County Island Hampton Tract-lot 5 NE ¼ SE ¼ Sec 4 T 31 N., R 1E W.M.

g and distance from section or subdivision corner from Metskers

(3) PROPOSED USE: Domestic ☐ Industrial ☐ Municipal ☒ Irrigation ☐ Test Well ☐ Other ☐

(4) TYPE OF WORK: Owner's number of well (if more than one) #1
New well ☒ Method: Dug ☐ Bored ☐
Deepened ☐ Cable ☒ Driven ☐
Reconditioned ☐ Rotary ☐ Jetted ☐

(5) DIMENSIONS: Diameter of well 12 inches.
Drilled 66 ft. Depth of completed well 66 ft.

(6) CONSTRUCTION DETAILS:

Casing installed: 6" Diam. from 0 ft. to 56 ft.
Threaded ☐ 6" Diam. from 61 ft. to 66 ft.
Welded ☒ " Diam. from ft. to ft.

Perforations: Yes ☐ No ☒
Type of perforator used
SIZE of perforations in. by in.
perforations from ft. to ft.
perforations from ft. to ft.
perforations from ft. to ft.

Screens: Yes ☒ No ☐
Manufacturer's Name Cook
Type 304 Stainless Model No.
Diam. 6" Slot size 10 from 56 ft. to 61 ft.
Diam. Slot size from ft. to ft.

Gravel packed: Yes ☒ No ☐ Size of gravel: Aqua #8
Gravel placed from 66 ft. to 40 ft.

Surface seal: Yes ☒ No ☐ To what depth? 40 ft.
Material used in seal Cement grout
Did any strata contain unusable water? Yes ☐ No ☒
Type of water? Depth of strata
Method of sealing strata off

(7) PUMP: Manufacturer's Name
Type: H.P.

(8) WATER LEVELS: Land-surface elevation above mean sea level 40 ft.
Static level 30' ft. below top of well Date
Artesian pressure lbs. per square inch Date
Artesian water is controlled by (Cap, valve, etc.)

(9) WELL TESTS: Drawdown is amount water level is lowered below static level
Was a pump test made? Yes ☒ No ☐ If yes, by whom? Driller
Yield: 27 gal./min. with 31 ft. drawdown after 6 hrs.
" " " "
" " " "

Recovery data (time taken as zero when pump turned off) (water level measured from well top to water level)

Time	Water Level	Time	Water Level	Time	Water Level

Date of test
Bailer test gal./min. with ft. drawdown after hrs.
Artesian flow g.p.m. Date
Temperature of water Was a chemical analysis made? Yes ☐ No ☐

(10) WELL LOG:

Formation: Describe by color, character, size of material and structure, and show thickness of aquifers and the kind and nature of the material in each stratum penetrated, with at least one entry for each change of formation.

MATERIAL	FROM	TO
topsoil	0	2
sand & gul	2	10
Grey fine to med sand	10	45
Grey sand - water bearing	45	61
grey silt bound sand & gul	61	66

Work started , 19 Completed , 19

WELL DRILLER'S STATEMENT:

This well was drilled under my jurisdiction and this report is true to the best of my knowledge and belief.

NAME Holt Drilling Inc (Person, firm, or corporation) (Type or print)

Address 12565 32nd Street East

[Signed] [signature] (Well Driller)

License No. 1099 Date 4-1 19 8

(USE ADDITIONAL SHEETS IF NECESSARY)

File Original and First Copy with Department of Ecology
Second Copy — Owner's Copy
Third Copy — Driller's Copy

WATER WELL REPORT

STATE OF WASHINGTON

Application No. ....

Permit No. ....

(1) OWNER: Name City of Coupeville Address 4 Seventh Street P.O. 725 Cap. 98239

(2) LOCATION OF WELL: County Island-Hampton Tract-Lot 5 NE¼ SE¼ Sec. 24 T. 31 N., R. 1E W.M.
from Melskers

...g and distance from section or subdivision corner

(3) PROPOSED USE: Domestic ☐ Industrial ☐ Municipal ☒ Irrigation ☐ Test Well ☐ Other ☐

(4) TYPE OF WORK: Owner's number of well (if more than one) .... #2
New well ☒ Deepened ☐ Reconditioned ☐
Method: Dug ☐ Bored ☐ Cable ☒ Driven ☐ Rotary ☐ Jetted ☐

(5) DIMENSIONS: Diameter of well 12 inches.
Drilled 90 ft. Depth of completed well 90 ft.

(6) CONSTRUCTION DETAILS:

Casing installed: 6" Diam. from 0 ft. to 80 ft.
Threaded ☐ 6" Diam. from 85 ft. to 90 ft.
Welded ☒ " Diam. from ft. to ft.

Perforations: Yes ☐ No ☒
Type of perforator used
SIZE of perforations in. by in.
perforations from ft. to ft.
perforations from ft. to ft.
perforations from ft. to ft.

Screens: Yes ☒ No ☐
Manufacturer's Name Cook
Type 304 Stainless Model No.
Diam. 6" Slot size 10 from 80 ft. to 85 ft.
Diam. Slot size from ft. to ft.

Gravel packed: Yes ☒ No ☐ Size of gravel: Aqua #8
Gravel placed from 50 ft. to 90 ft.

Surface seal: Yes ☒ No ☐ To what depth? 50 ft.
Material used in seal Cement Grout
Did any strata contain unusable water? Yes ☐ No ☒
Type of water? Depth of strata
Method of sealing strata off

(7) PUMP: Manufacturer's Name
Type: H.P.

(8) WATER LEVELS: Land-surface elevation above mean sea level .... 90 ft.
Static level 51 ft. below top of well Date
Artesian pressure lbs. per square inch Date
Artesian water is controlled by (Cap, valve, etc.)

(9) WELL TESTS: Drawdown is amount water level is lowered below static level
Was a pump test made? Yes ☒ No ☐ If yes, by whom? Driller
Yield: 37 gal./min. with 31 ft. drawdown after 4 hrs.
" " " "
" " " "

Recovery data (time taken as zero when pump turned off) (water level measured from well top to water level)

Time	Water Level	Time	Water Level	Time	Water Level

Date of test
Bailer test gal./min. with ft. drawdown after hrs.
Artesian flow g.p.m. Date
Temperature of water Was a chemical analysis made? Yes ☐ No ☐

(10) WELL LOG:

Formation: Describe by color, character, size of material and structure, and show thickness of aquifers and the kind and nature of the material in each stratum penetrated, with at least one entry for each change of formation.

MATERIAL	FROM	TO
top soil	0	2
Sand & gravel	2	12
Gray medium coarse sand	12	53
Gray fine to medium sand water bearing	53	90

Work started 1-8, 1987 Completed 1-15, 19..

WELL DRILLER'S STATEMENT:

This well was drilled under my jurisdiction and this report is true to the best of my knowledge and belief.

NAME Holt Drilling Inc. (Person, firm, or corporation) (Type or print)

Address 12515 32nd Street East

[Signed] [signature] (Well Driller)

License No. 1094 Date 4-10, 19..

(USE ADDITIONAL SHEETS IF NECESSARY)

File Original and First Copy with Department of Ecology
Second Copy — Owner's Copy
Third Copy — Driller's Copy

WATER WELL REPORT

STATE OF WASHINGTON

Application No. .....

Permit No. .....

(1) OWNER: Name City of Coupeville Address 4 Seventh Street Po. 125 Cap. 98239

(2) LOCATION OF WELL: County Island-Hamton Tract-Lot 5 NE ¼ SE ¼ Sec. 1 T 31 N., R 1E W.M.

from Metal

... and distance from section or subdivision corner

(3) PROPOSED USE: Domestic ☐ Industrial ☐ Municipal ☒ Irrigation ☐ Test Well ☐ Other ☐

(4) TYPE OF WORK: Owner's number of well (if more than one) .... #3

New well ☒ Method: Dug ☐ Bored ☐
Deepened ☐ Cable ☒ Driven ☐
Reconditioned ☐ Rotary ☐ Jetted ☐

(5) DIMENSIONS: Diameter of well 12 inches.
Drilled 114 ft. Depth of completed well 69 ft.

(6) CONSTRUCTION DETAILS:

Casing installed: 6" Diam. from 0 ft. to 53 ft.
Threaded ☐ ..... " Diam. from 58 ft. to 63 ft.
Welded ☐ ..... " Diam. from ..... ft. to ..... ft.

Perforations: Yes ☐ No ☒
Type of perforator used .....
SIZE of perforations ..... in. by ..... in.
..... perforations from ..... ft. to ..... ft.
..... perforations from ..... ft. to ..... ft.
..... perforations from ..... ft. to ..... ft.

Screens: Yes ☒ No ☐
Manufacturer's Name Cook
Type 304 Stainless Model No. .....
Diam. 6 Slot size 10 from 53 ft. to 58 ft.
Diam. ..... Slot size ..... from ..... ft. to ..... ft.

Gravel packed: Yes ☒ No ☐ Size of gravel: Aqua #8
Gravel placed from 63.5 ft. to 33 ft.

Surface seal: Yes ☒ No ☐ To what depth? 33 ft.
Material used in seal Cement Grout
Did any strata contain unusable water? Yes ☐ No ☒
Type of water? ..... Depth of strata .....
Method of sealing strata off .....

(7) PUMP: Manufacturer's Name .....
Type: ..... H.P. .....

(8) WATER LEVELS: Land-surface elevation above mean sea level .... 110 ft.
Static level 28 ft. below top of well Date .....
Artesian pressure ..... lbs. per square inch Date .....
Artesian water is controlled by ..... (Cap, valve, etc.)

(9) WELL TESTS: Drawdown is amount water level is lowered below static level
Was a pump test made? Yes ☒ No ☐ If yes, by whom? .....
Yield: 8 gal./min. with 15 ft. drawdown after 4 hrs.
" " " "
" " " "

Recovery data (time taken as zero when pump turned off) (water level measured from well top to water level)

Time	Water Level	Time	Water Level	Time	Water Level

Date of test .....
Bailer test ..... gal./min. with ..... ft. drawdown after ..... hrs.
Artesian flow ..... g.p.m. Date .....
Temperature of water ..... Was a chemical analysis made? Yes ☐ No ☐

(10) WELL LOG:

Formation: Describe by color, character, size of material and structure, and show thickness of aquifers and the kind and nature of the material in each stratum penetrated, with at least one entry for each change of formation

MATERIAL	FROM	TO
topsoil	0	2
sand some gravel	2	6
tan clay	6	12
Brown sand	12	46
Gray sand some silts	46	67
Gray silty gravel + cobbles	67	81
till	81	97
gray sand	97	100
Sand & gravel layered with silt	100	114

Work started 1-16 1987 Completed 3-20 1987

WELL DRILLER'S STATEMENT:

This well was drilled under my jurisdiction and this report is true to the best of my knowledge and belief.

NAME Holt Drilling Inc. (Person, firm, or corporation) (Type or print)

Address 12575 32nd Street East

[Signed] Randy Holt (Well Driller)

License No. 1099 Date 4-10-87, 19...

(USE ADDITIONAL SHEETS IF NECESSARY)

File Original and First Copy with Department of Ecology
Second Copy — Owner's Copy
Third Copy — Driller's Copy

WATER WELL REPORT
STATE OF WASHINGTON

Application No. .....
Permit No. .....

(1) OWNER: Name City of Coupeville Address 4 Seventh Street P.O. 725 Coup 9823

(2) LOCATION OF WELL: County Island Hampton tract Lots NE ¼ SE ¼ Sec 14 T 31 N., R 1 E W
from Mitchell
...ng and distance from section or subdivision corner

(3) PROPOSED USE: Domestic ☐ Industrial ☐ Municipal ☒ Irrigation ☐ Test Well ☐ Other ☐

(4) TYPE OF WORK: Owner's number of well (if more than one) #4
New well ☒ Deepened ☐ Reconditioned ☐
Method: Dug ☐ Bored ☐ Cable ☒ Driven ☐ Rotary ☐ Jetted ☐

(5) DIMENSIONS: Diameter of well 12 inches.
Drilled 93 ft. Depth of completed well 92.5 ft.

(6) CONSTRUCTION DETAILS:
Casing installed: 6" Diam. from 0 ft. to 77.5 ft.
Threaded ☐ 6" Diam. from 87.5 ft. to 93.5 ft.
Welded ☒ " Diam. from ft. to ft.

Perforations: Yes ☐ No ☒
Type of perforator used
SIZE of perforations in. by in.
perforations from ft. to ft.
perforations from ft. to ft.
perforations from ft. to ft.

Screens: Yes ☒ No ☐
Manufacturer's Name Cook
Type 304 Stainless Model No.
Diam. 6 Slot size 10 from 77.5 ft. to 87.5 ft.
Diam. Slot size from ft. to ft.

Gravel packed: Yes ☒ No ☐ Size of gravel: Aqua #8
Gravel placed from 93 ft. to 56 ft.

Surface seal: Yes ☒ No ☐ To what depth? 56 ft.
Material used in seal Cement Grout
Did any strata contain unusable water? Yes ☐ No ☒
Type of water? Depth of strata
Method of sealing strata off

(7) PUMP: Manufacturer's Name
Type: H.P.

(8) WATER LEVELS: Land-surface elevation above mean sea level ft.
Static level 26 ft. below top of well Date
Artesian pressure lbs. per square inch Date
Artesian water is controlled by (Cap, valve, etc.)

(9) WELL TESTS: Drawdown is amount water level is lowered below static level
Was a pump test made? Yes ☒ No ☐ If yes, by whom? Driller
Yield: 42 gal./min. with 40 ft. drawdown after 8 hrs.
" " " "
" " " "

Recovery data (time taken as zero when pump turned off) (water level measured from well top to water level)

Time	Water Level	Time	Water Level	Time	Water Level

Date of test
Bailer test gal./min. with ft. drawdown after hrs.
Artesian flow g.p.m. Date
Temperature of water Was a chemical analysis made? Yes ☐ No ☐

(10) WELL LOG:
Formation: Describe by color, character, size of material and structure, a... show thickness of aquifers and the kind and nature of the material in ea... stratum penetrated, with at least one entry for each change of formatio...

MATERIAL	FROM	TO
topsoil	0	2
Sand & gravel	2	6
Brown sand	6	34
Gray sand	34	40
Gray silt	40	44
Gray sand water bearing	44	51
Hard gray silt	51	75
Gray sand water bearing	75	90
layered silt & sand	90	93

Work started 3-20, 1987 Completed 4-1, 19..

WELL DRILLER'S STATEMENT:
This well was drilled under my jurisdiction and this report true to the best of my knowledge and belief.

NAME Holt Drilling Inc (Person, firm, or corporation) (Type or print)
Address 12515 32nd street East
[Signed] Randy Holt (Well Driller)
License No. 1099 Date 4-10, 19..

(USE ADDITIONAL SHEETS IF NECESSARY)

4-87

WELL 1-90 ~~[illegible]~~ GALLERY

File Original and First Copy with Department of Ecology
Second Copy — Owner's Copy
Third Copy — Driller's Copy

WATER WELL REPORT

STATE OF WASHINGTON

Application No. .....

Permit No. .....

(1) OWNER: Name [illegible] Address [illegible]

(2) LOCATION OF WELL: County [illegible] — NE ¼ [illegible] ¼ Sec. 13 T. 31 N., R. 1E W.M.

Bearing and distance from section or subdivision corner

(3) PROPOSED USE: Domestic ☐ Industrial ☐ Municipal ☑ Irrigation ☐ Test Well ☐ Other ☐

(4) TYPE OF WORK: Owner's number of well (if more than one) 2

New well ☑ Method: Dug ☐ Bored ☐
Deepened ☐ Cable ☐ Driven ☐
Reconditioned ☐ Rotary ☐ Jetted ☐

(5) DIMENSIONS: Diameter of well 8 inches.
Drilled 238 ft. Depth of completed well 228 ft.

(6) CONSTRUCTION DETAILS:

Casing installed: 8" Diam. from [illegible] ft. to 208 ft.
Threaded ☐ ....." Diam. from ..... ft. to ..... ft.
Welded ☑ ....." Diam. from ..... ft. to ..... ft.

Perforations: Yes ☐ No ☑
Type of perforator used .....
SIZE of perforations ..... in. by ..... in.
..... perforations from ..... ft. to ..... ft.
..... perforations from ..... ft. to ..... ft.
..... perforations from ..... ft. to ..... ft.

Screens: Yes ☑ No ☐
Manufacturer's Name Johnson
Type 5.5 Model No. 304
Diam. 8 Slot size 12 from [illegible] ft. to [illegible] ft.
Diam. ..... Slot size ..... from ..... ft. to ..... ft.

Gravel packed: Yes ☐ No ☑ Size of gravel: .....
Gravel placed from ..... ft. to ..... ft.

Surface seal: Yes ☑ No ☐ To what depth? 18 ft.
Material used in seal [illegible] Cement
Did any strata contain unusable water? Yes ☐ No ☐
Type of water? ..... Depth of strata .....
Method of sealing strata off .....

(7) PUMP: Manufacturer's Name .....
Type: ..... H.P. .....

(8) WATER LEVELS: Land-surface elevation above mean sea level 200 (+-) ft.
Static level 160 ft. below top of well Date .....
Artesian pressure ..... lbs. per square inch Date .....
Artesian water is controlled by ..... (Cap, valve, etc.)

(9) WELL TESTS: Drawdown is amount water level is lowered below static level
Was a pump test made? Yes ☑ No ☐ If yes, by whom? Driller
Yield: 64 gal./min. with 43 ft. drawdown after 24+ hrs.
" " " "
" " " "

Recovery data (time taken as zero when pump turned off) (water level measured from well top to water level)

Time	Water Level	Time	Water Level	Time	Water Level

Date of test .....
Bailer test 60+ gal./min. with 37 ft. drawdown after 8 hrs.
Artesian flow ..... g.p.m. Date .....
Temperature of water ..... Was a chemical analysis made? Yes ☐ No ☐

(10) WELL LOG:

Formation: Describe by color, character, size of material and structure, and show thickness of aquifers and the kind and nature of the material in each stratum penetrated, with at least one entry for each change of formation.

MATERIAL	FROM	TO
SAND + Gravel	0	63
FINE SAND - Some Clay	64	173
WATER HARD SAND Blue Clay	174	205
Very HARD Clay + Rock	206	207
Fine Water Sand - Heave	208	228
Brown Clay + Gravel	229	238

RECEIVED
OCT 30 1990
TOWN OF [illegible]
TREASURER [illegible]

Work started 10/2, 1990 Completed 10/19, 1990

WELL DRILLER'S STATEMENT:

This well was drilled under my jurisdiction and this report is true to the best of my knowledge and belief.

NAME Well Done Drillers (Person, firm, or corporation) (Type or print)

Address 429 N. Valley Dr

[Signed] [illegible] (Well Driller)

License No. 11304 Date 10/19, 1990

WATER WELL REPORT

STATE OF WASHINGTON ECOLOGY — Original & 1st copy - Ecology, 2nd copy - owner, 3rd copy - driller

CURRENT Notice of Intent No. W238172

Unique Ecology Well ID Tag No. ALO 244

Water Right Permit No. _____

Property Owner Name Town of Coupeville 1-06

Well Street Address Keystone + Wanamaker

City Coupeville County: Island

Location NE 1/4 - 1/4 SE 1/4 Sec 14 Twn 31N R 1 (EWM circle one or WWM)

Lat/Long: (s,t,r still REQUIRED) Lat Deg _____ Lat Min/Sec _____ Long Deg _____ Long Min/Sec _____

Tax Parcel No. _____

Construction/Decommission ("x" in circle)

(•) Construction

( ) Decommission *ORIGINAL CONSTRUCTION Notice of Intent Number* _____

PROPOSED USE: ☐ Domestic ☐ Industrial ☑ Municipal ☐ DeWater ☐ Irrigation ☐ Test Well ☐ Other _____

TYPE OF WORK: Owner's number of well (if more than one) 6+7

☑ New Well ☐ Reconditioned ☐ Deepened — *Method:* ☐ Dug ☐ Bored ☐ Driven ☐ Cable ☑ Rotary ☐ Jetted

DIMENSIONS: Diameter of well 8" inches, drilled 203 ft. Depth of completed well 203 ft.

CONSTRUCTION DETAILS

Casing ☑ Welded 8" Diam. from +18 ft. to 175 ft.

Installed: ☐ Liner installed _____" Diam. from _____ ft. to _____ ft.

☐ Threaded _____" Diam. from _____ ft. to _____ ft.

Perforations: ☐ Yes ☑ No

Type of perforator used _____

SIZE of perfs _____ in. by _____ in. and no. of perfs _____ from _____ ft. to _____ ft.

Screens: ☑ Yes ☐ No ☑ K-Pac Location 174-176

Manufacturer's Name Johnson w/ 3' Sump

Type SS Model No. 304

Diam. 8 Slot Size 12 from 176 ft. to 192 ft.

Diam. 8 Slot Size 15 from 192 ft. to 293 ft.

Gravel/Filter packed: ☐ Yes ☑ No ☐ Size of gravel/sand _____

Materials placed from _____ ft. to _____ ft.

Surface Seal: ☑ Yes ☐ No To what depth? 18+ ft

Materials used in seal Bentonite

Did any strata contain unusable water? ☐ Yes ☑ No

Type of water? _____ Depth of strata _____

Method of sealing strata off _____

PUMP: Manufacturer's Name Grundfos

Type: Sub- H.P. 7.5

WATER LEVELS: Land-surface elevation above mean sea level 150 ft.

Static level 154.0 ft. below top of well Date 6-15-06

Artesian pressure _____ lbs. per square inch Date _____

Artesian water is controlled by _____ (cap,valve, etc.)

WELL TESTS: Drawdown is amount water level is lowered below static level.

Was a pump test made? ☑ Yes ☐ No If yes, by whom? Driller

Yield: 45 gal./min. with 21.5 ft. drawdown after 24+ hrs.

Yield: _____ gal./min. with _____ ft. drawdown after _____ hrs.

Yield: _____ gal./min. with _____ ft. drawdown after _____ hrs.

Recovery data (time taken as zero when pump turned off)(water level measured from well top to water level)

Time	Water Level	Time	Water Level	Time	Water Level
____	154	____	____	____	____
____	____	____	____	____	____
____	____	____	____	____	____

Date of test 6-15-06

Bailer test 20 gal./min. with 70 ft. drawdown after 8 hrs.

Airtest _____ gal./min. with stem set at _____ ft. for _____ hrs.

Artesian flow _____ g.p.m. Date _____

Temperature of water _____ Was a chemical analysis made? ☑ Yes ☐ No

CONSTRUCTION OR DECOMMISSION PROCEDURE

Formation: Describe by color, character, size of material and structure, and the kind and nature of the material in each stratum penetrated, with at least one entry for each change of information. Indicate all water encountered. (USE ADDITIONAL SHEETS IF NECESSARY.)

MATERIAL	FROM	TO
Brown SAND	0	55
Wood / " SAND + Gravel	55	63
Brown Gravel	63	85
Brown Sand / Gravel	85	155
Dark-Fine Sand - Moist	155	165
Grey Clay + Gravel	165	170
HARD WATER SAND - Sm Gravel	170	202½
HARD Grey Clay	202½	203

Start Date 6-10-06 Completed Date 7/03/06

WELL CONSTRUCTION CERTIFICATION: I constructed and/or accept responsibility for construction of this well, and its compliance with all Washington well construction standards. Materials used and the information reported above are true to my best knowledge and belief.

☑ Driller ☐ Engineer ☐ Trainee Name (Print) Jack + Ryan Harris

Driller/Engineer/Trainee Signature Jack Harris

Driller or Trainee License No. 1304

Drilling Company Well Done Drillers

Address 440 Hill Valley Dr.

City, State, Zip Coupeville WA - 98239

Contractor's Registration No. WELLDE100SNB Date 7-20-06

If trainee, licensed driller's _____

WATER WELL REPORT

Original & 1st copy – Ecology, 2nd copy – owner, 3rd copy – driller

STATE OF WASHINGTON DEPARTMENT OF ECOLOGY

Construction/Decommission *("x" in circle)*

☒ Construction

☐ Decommission *ORIGINAL INSTALLATION*

Notice of Intent Number ____

PROPOSED USE: ☐ Domestic ☐ Industrial ☒ Municipal ☐ DeWater ☐ Irrigation ☐ Test Well ☐ Other ____

TYPE OF WORK: Owner's number of well (if more than one) Keyst

☒ New well ☐ Reconditioned *Method:* ☐ Dug ☐ Bored ☐ Driven ☐ Deepened ☒ Cable ☐ Rotary ☐ Jetted

DIMENSIONS: Diameter of well 12 inches, drilled 200 ft. Depth of completed well 190 ft.

CONSTRUCTION DETAILS

Casing Installed: ☒ Welded 12" Diam. from +3 ft. to 144 ft.

☐ Liner installed ____" Diam. from ____ ft. to ____ ft.

☐ Threaded ____" Diam. From ____ ft. to ____ ft.

Perforations: ☐ Yes ☒ No

Type of perforator used ____

SIZE of perfs ____ in. by ____ in. and no. of perfs ____ from ____ ft. to ____ ft.

Screens: ☒ Yes ☐ No ☐ K-Pac Location ____

Manufacturer's Name Johnson

Type SS Model No. PS

Diam. 8 Slot size 0.040 from 142 ft. to 182 ft.

Diam. ____ Slot size ____ from ____ ft. to ____ ft.

Gravel/Filter packed: ☒ Yes ☐ No Size of gravel/sand 8 x 12

Materials placed from 122 ft. to 190 ft.

Surface Seal: ☒ Yes ☐ No. To what depth? 20 ft.

Material used in seal bentonite

Did any strata contain unusable water? ☐ Yes ☒ No

Type of water? ____ Depth of strata ____

Method of sealing strata off ____

PUMP: Manufacturer's Name ____

Type: ____ H.P. ____

WATER LEVELS: Land-surface elevation above mean sea level 200 ft.

Static level 125.0 ft. below top of well Date 3/4/08

Artesian pressure ____ lbs. per square inch Date ____

Artesian water is controlled by ____ cap, valve, etc.)

WELL TESTS: Drawdown is amount water level is lowered below static level

Was a pump test made? ☒ Yes ☐ No If yes, by whom? R,N&S

Yield: 302 gal./min. with 20.1 ft. drawdown after 24 hrs.

Yield: ____ gal./min. with ____ ft. drawdown after ____ hrs.

Yield: ____ gal./min. with ____ ft. drawdown after ____ hrs.

Recovery data (time taken as zero when pump turned off) (water level measured from well top to water level)

Time	Water Level	Time	Water Level	Time	Water Level
1	129.3	5	128	30	125.9
2	128.4	10	126.4	45	125.8
3	127.8	15	126.1	____	____

Date of test Bailer test ____ gal./min. with ____ ft. drawdown after ____ hrs.

Airtest gal./min. with stem set at ____ ft. for ____ hrs.

Artesian flow ____ g.p.m. Date ____

Temperature of water 51.5 Was a chemical analysis made? ☒ Yes ☐ No

CURRENT

Notice of Intent No. WE07945

Unique Ecology Well ID Tag No. AFT 338

Water Right Permit No. CG1-*00845S

Property Owner Name Town of Coupeville

Well Street Address Keystone Hill Road

City Coupeville County Island

Location NE1/4-1/4 NE1/4 Sec 11 Twn 31N R 1E

EWM ☒ Or WWM ☐

Lat/Long (s, t, r Still REQUIRED) Lat Deg 48 Min 192 Sec 33 Long Deg 122 Min 637 Sec 99

CONSTRUCTION OR DECOMMISSION PROCEDURE

Formation: Describe by color, character, size of material and structure, and the kind and nature of the material in each stratum penetrated, with at least one entry for each change of information. (USE ADDITIONAL SHEETS IF NECESSARY.)

MATERIAL	FROM	TO
Top soil, brown	0	3
Silty sand, gravel, tight, br	3	10
Silty gravel tight brown	10	25
Silty gravel tight gray	25	28
Silty sand w/fine gravel gray	28	58
Silty sand w/trace gravel gra	58	80
Silty sand, gray	80	133
Silty clay w/trace gvl gray	133	140
Siltbound gravel gray	140	143
Silty sand gvl gray some wate	143	145
Sand gravel gray water	145	153
Dirty sand & gvl w/trc silt	153	157
sand, fine gray	157	163
Sand, fine gray w/Trc gvl	163	176
Sand fine-med gray	176	182
Sand fine silty gray	182	200

Start Date 1/23/08 Completed Date 3/7/08

Tax Parcel No. R131114324450

WELL CONSTRUCTION CERTIFICATION: I constructed and/or accept responsibility for construction of this well, and its compliance with all Washington well construction standards. Materials used and the information reported above are true to my best knowledge and belief.

☒ Driller ☐ Engineer ☐ Trainee Driller or trainee License No. 1146

Name (Print Last, First) Dodge , Billy A.

Driller/Engineer/Trainee Signature [signature]

IF TRAINEE: Driller's License No:

Driller's Signature:

Drilling Company Hokkaido Drilling, Inc.

Address P.O. Box 100

City, State, Zip Graham , WA, 98338

Contractor's Registration No. HOKKAD1017M8 Date 3/25/08

Ecology is an Equal Opportunity Employer

Appendix F

Declaration of Covenants and Restrictive Covenants

Note:

Only the covenants needed for wells installed since 2003 (Well Nos. 1-06 and 1-08) are included. The Covenant for Well No. 1-08 is part of the easement agreement with the County and is included in Appendix J. For other covenants refer to the 2003 to 2008 *Water System Plan*.

RETURN ORIGINAL DOCUMENT TO:

NAME (Print) TOWN OF COUPEVILLE

MAILING ADDRESS PO BOX 725

COUPEVILLE WA 98239

DECLARATION OF COVENANT

Know all men by these presents that I (we) the undersigned, owner(s) in fee simple of the land described herein, hereby declare this covenant and place same on record.

I (we), the grantor(s) herein, THE TOWN OF COUPEVILLE

am (are) the owner(s) in fee simple of (an interest in) the following described real estate situated in ISLAND County, State of Washington, to wit: The south 810.21 feet of the southeast 1/4 of the northeast 1/4 of Section 14, Township 31 North, Range 1, East W.M., EXCEPT County Road; situate in the County of Island, State of Washington.

on which the grantor(s) owns and operates a well and waterworks supplying water for public use located on said real estate, to wit:

The Town of Coupeville's Fort Casey Well Field

and grantor(s) is (are) required to keep the water supplied from said well free from impurities which might be injurious to the public health.

It is the purpose of these grants and covenants to prevent certain practices hereinafter enumerated in the use of said grantor(s) land which might contaminate said water supply.

NOW, THEREFORE, the grantor(s) agree(s) and covenant(s) that said grantor(s), his (her) (their) heirs, successors and assigns will not construct, maintain, or suffer to be constructed or maintained upon the said land of the grantor(s) and within 100 (one hundred) feet of the well herein described, so long as the same is operated to furnish water for public consumption, any of the following: structures, residences, cesspools, sewers, privies, septic tanks, drainfields, manure piles, garbage of any kind or description, barns, chicken houses, rabbit hutches, pigpens, or other enclosures or structures for the keeping or maintenance of fowls or animals, or storage of liquid or dry chemicals, herbicides, or insecticides.

These covenants shall run with the land and shall be binding on all parties having or acquiring any right, title, or interest in the land described herein or any part thereof, and shall inure to the benefit of each owner thereof.

WITNESS my hand this 16th day of July, 2003

Nancy Conard (Seal)

(Seal)

Grantor(s)

State of Washington
County of Island) ss

I, the undersigned, a Notary Public in and for the above named County and State, do hereby certify that on this 16th day of July, 2003, personally appeared before me Nancy Conard to me known to be the individual woman described in and who executed the within instrument, and acknowledge that he (they) signed and sealed the same as her free and voluntary act and deed, for the uses and purposes therein mentioned.

GIVEN under my hand and official seal the day and year last above written.

LINDA MARSH NOTARY PUBLIC COMMISSION EXPIRES 2-14-06 STATE OF WASHINGTON

(SIGNATURE) Linda Marsh

(NAME - PRINTED) LINDA MARSH

Notary Public in and for the
State of Washington residing at Oak Harbor
My Commission Expires: Feb. 14, 2006

SHOW MAP HERE.
ALL TEXT MUST BE AT LEAST 8 POINT TYPE.

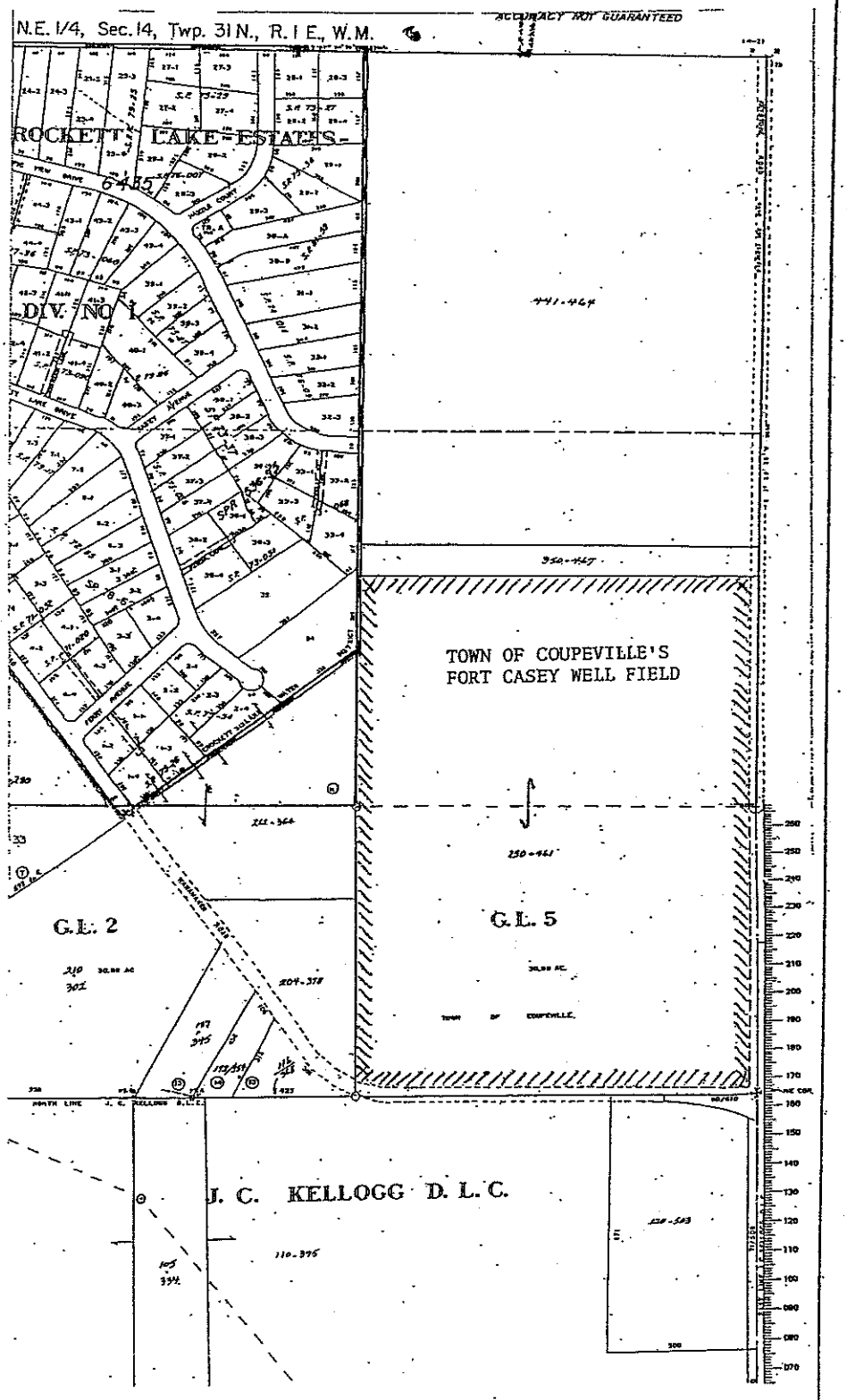

Please use this page for full legal descriptions of properties referenced on Page 1.

The South 810.21 feet of the Southeast quarter of the Northeast quarter of Section 14, Township 31 North, Range 1, East W.M., EXCEPT County Road; AND

The following described land of Fort Casey Military Reservation which was acquired by the United States of America as recorded in deeds or Records, Island County, Washington, from Susan H. Hancock, et al, Vol. 17, Page 361; Bertha S. Jenne Vol. 25, Page 279; Sabine Abbott, et ux, Vol. 22, Page 270 and Vol. 24, Page 191; John C. Kellogg, et al, Vol. 20, Page 171 and Vol. 20, Page 119; Albert H. Kellogg, et ux, Vol. 20, Page 279; William Hampton, et ux, Vol. 19, Page 434; Matilda L. Crockett, et al, Vol. 21 Page 538 and that certain sewer line easement dated January 31, 1906 from William Hampton, et ux, all situated in Section 9, 14, 15, 16, 21 and 22, Township 31 North, Range 1 East of the Willamette Meridian, Island County, Washington, said described portion being more particularly described as follows:

All that certain land known as the "Hampton Tract" being all of Lot 5, Section 14, Township 31 North, Range 1 East, Willimette Meridian, Island County, Washington, together with improvements located thereon and including the Fort Casey Military Reservation water supply system consisting of the following: All water mains, water pipe line extending from the above described "Hampton Tract" to the Fort Casey Military Reservation, 112,000 gallon Water Storage Tank, 500,000 gallon Reservoir, filtration basins, wells, pumps and all other oppurtenances thereto, (but excluding service connections) substantially as shown on schematic drawing No. FS-26-2-9. Together with improvements located thereon.

Appendix G

Well Pumping Test Results
Hydrogeologist's Reports

Note:

Only the Hydrogeologist's Reports and pumping test data for wells installed since 2003 (Well Nos. 1-06 and 1-08) are included. For other reports refer to the 2003 to 2008 *Water System Plan* and the list of referenced reports in the Table of Contents.

ROBINSON NOBLE SALTBUSH INC. Established 1947
GROUNDWATER & ENVIRONMENTAL SCIENTISTS
1947 60 Years 2007

TOWN OF COUPEVILLE
KEYSTONE HILL
WELL CONSTRUCTION AND TESTING REPORT

APRIL 2008

by

Douglas C. Dow, L.HG.
Senior Associate Hydrogeologist

State of Washington
Hydrogeologist
258
Licensed Geologist
DOUGLAS C. DOW

3011 South Huson Street, Suite A Tacoma, Washington 98409 • (253) 475-7711 • Fax: (253) 472-5846
e-mail: mail@robinson-noble.com

TOWN OF COUPEVILLE
KEYSTONE HILL WELL
CONSTRUCTION AND TESTING REPORT
APRIL 2008

Table of Contents

INTRODUCTION 1

BACKGROUND 1

WELL CONSTRUCTION 1

WELL TESTING 2

- PUMPING TEST RESULTS 2
  - *Transmissivity* 3
- WATER QUALITY TESTING 3
  - *Inorganic Test Results* 3
  - *Volatile Organic Test Results* 3
  - *Synthetic Organic Test Results* 3
  - *Radionuclide Test Results* 3
  - *Bacteriological Test Results* 4

FINDINGS 4

CONCLUSIONS AND RECOMMENDATIONS 4

FIGURES

FIGURE 1 – WELL LOCATION MAP
FIGURE 2 – CONSTRUCTION DETAIL AND GEOLOGIC LOG
FIGURE 3 – KEYSTONE HILL WELL HYDROGRAPH
FIGURE 4 – KEYSTONE HILL WELL DRAWDOWN PLOT
FIGURE 5 – KEYSTONE HILL WELL RECOVERY DATA
FIGURE 6 – YOUDERIAN OBSERVATION WELL HYDROGRAPH
FIGURE 7 – YOUDERIAN OBSERVATION WELL DRAWDOWN PLOT
FIGURE 8 – YOUDERIAN OBSERVATION WELL RECOVERY DATA

Tables

Table 1 – Well Screen Assembly Details
Table 2 – Pumping Test Results

APPENDIX

WATER WELL REPORT FORM
GRAIN SIZE ANALYSES
MANUAL WATER LEVEL MEASUREMENTS
LABORATORY WATER QUALITY RESULTS

TOWN OF COUPEVILLE
KEYSTONE HILL WELL
CONSTRUCTION AND TESTING REPORT
APRIL 2008

Introduction

This report presents Robinson, Noble & Saltbush's findings and recommendations based on observation of construction, well screen design and development, and conducting a pumping test of Keystone Hill Well 1 for the Town of Coupeville (Town) on Whidbey Island, Washington. The Washington State Department of Health (Health) requires hydrogeologic evaluation of 24-hour, constant-rate, individual well tests prior to source approval. A Robinson, Noble & Saltbush hydrogeologist prepared a test plan, assisted with testing, and evaluated the test results. The Town's drilling contractor, Hokkaido Drilling and Development Co. of Graham, Washington, conducted the test. Water samples were collected and analyzed by Avocet Environmental Testing for all Group A parameters.

Background

The Town has water rights totaling 970 gallons per minute (gpm) and 606 acre-feet per year (afy) for their new well-field complex that includes the Fort Casey, Keystone, and in Town well fields. Because of the risk of seawater intrusion into the in Town well field, the Town decided to explore the potential of the aquifer identified by the Patmore Well on Keystone Hill Road west of the Navy Auxiliary Airfield. The new well is located in the southeast corner of parcel number R13111-432-4450 about 1.25 miles north of the Town's Fort Casey Wellfield, in Township 31 North, Range 1 East, NE4, NE4, Section 11 on Whidbey Island (**Figure 1**).

Well Construction

The 12-inch Keystone Hill Well was drilled to a depth of 200 feet by Hokkaido Drilling and Development Corp. with cable-tool equipment. The hydrogeologic log and completion details are shown on **Figure 2** and on the well's Water Well Report form in the **Appendix**. Aquifer sand samples were collected by the driller during construction and sieved in Robinson, Noble & Saltbush's soils laboratory. The grain-size analyses are included in the **Appendix** and indicated that an efficient well screen design could include a 0.040-inch slot, Type 304 stainless-steel, wire wrap well screen surrounded by Colorado Silica sand size 8-12. The well screen assembly details are listed in **Table 1**. The well screens were installed between 142 and 182 feet below ground surface (bgs) in the predominately gray sand aquifer. A sand pack was placed in the annulus between the 12-inch casing and 8-inch well screen from 122 to 190 feet. The 12-inch casing was pulled back to 144 feet. The 12-inch casing shoe remnant was left in the hole between 190 and 200 feet. The open hole was backfilled with washed and chlorinated pea gravel to provide a solid base for the well screen assembly.

Table 1: Well Screen Assembly Details

Item	Top (feet BGS)	Bottom (feet BGS)	Comments
Riser	122	142	8-inch mild steel pipe
0.040-slot screen	142	182	Type 304 stainless steel
Tailpipe	182	190	Plate bottom

Notes: All screens are 7.88-inch inside diameter.
All screens are Type 304 stainless steel, v-wire construction and standard strength.
All measurements are referenced to ground surface at the time of well construction.
Filter sand is Colorado Silica Sand size 8-12.

The sediments penetrated by the drill are predominately dry, gray, silty sand with gravel layers from land surface to a depth of 133 feet. Gray silty clay and siltbound gravel found between 133 and 143 feet comprise the confining layer overlying the aquifer. The static water level was measured at a depth of 122 feet bgs and stayed at about that depth while drilling continued through the water-bearing sand and gravel to the bottom of the aquifer at 182 feet bgs.

Well Testing

Hokkaido installed a 40-horsepower submersible pump into the well screen with the intake at a depth of 152 feet. A step pumping test was conducted on March 3rd followed by the 24-hour test on March 4th, which was started at 10:30 a.m. The test was monitored with a transducer/data logger set to measure the water level in the well every minute. Manual measurements included in the **Appendix**, were measured and recorded by the driller at selected intervals. A recording barometer was secured to a tree next to the well for the duration of the test period.

Pumping Test Results

Test results are shown on **Table 2** and in **Figures 3, 4** and 5. The Keystone Hill Well was pumped for 24 hours at an average rate of 302 gpm. At the end of the 24 hours, the water level drawdown below the static water level of 125.08 feet was 20.12 feet, indicating a specific capacity of about 15 gpm/ft of drawdown. As shown on **Figures 3** and **4**, the pumping water level at the end of the 24-hour test was approximately 145 feet and had reached stabilization. Stabilization is defined by Health as less than 0.10 feet of drawdown per hour during the last four hours of testing. The manual water level data is included in the **Appendix**. The aquifer was not impacted by tidal changes.

Table 2: Pumping Test Results

Date	Discharge Rate (gpm)	Elapsed Time (hrs)	Drawdown (feet)	Specific Capacity (gpm/ft)
3/3	145	0.5	8.59	16.8
	200	0.5	11.57	17.2
	261	0.5	15.52	16.8
	302	0.5	18.58	16.2
	332	0.5	20.94	15.8
3/4-5	302	24	20.12	15.0

The pumping water level after 24 hours was within two feet of the top of the well screen. The pumping water level in a high production well should never be allowed to draw down inside the

well screen. This practice can cause cascading water, air entrainment, reduced well efficiency, increased encrustation potential, and shorter well life.

Youderian Observation Well

The property to the south is owned by Ernest Youderian. He had a new well (APR989) drilled to a depth of 168 feet into the same aquifer. A copy of the well's Water Well Report Form is included in the **Appendix**. The measured distance of the Youderian Well south of the Keystone Hill Well is about 700 feet. As shown on **Figures 6**, 7, and 8, it was also monitored with a transducer/data logger measuring water levels at one-minute intervals. The 24-hour test produced about one half foot of interference as shown on **Figure 6**. This small amount of interference will not impair the use of the Youderian well. **Figure 6** also shows that the static water level in the aquifer appears to have declined about one-tenth of a foot during the week long monitoring period. This apparent seasonal decline is also shown on the Keystone Hill Well 1 hydrograph, **Figure 3**.

Transmissivity

Transmissivity (T) represents the permeability for the full-aquifer thickness and is equivalent to the amount of water flowing through a vertical, one-foot wide strip of the aquifer in one day (under unit gradient). It is calculated from drawdown and recovery patterns, such as those illustrated in **Figures 4** and **5**. The transmissivity was calculated using the Jacob/Theis, modified, non-equilibrium formula from the pumping rate and the slope of the drawdown and recovery graphs. The average transmissivity calculated for the Keystone Hill Well is about 79,000 gpd/ft.

Water Quality Testing

Water samples were collected at 24 hours and sent to Avocet Environmental Testing for Group A drinking water analysis. Laboratory reports are included in the **Appendix**.

Inorganic Test Results

Water pumped during the test was sand free and had a slight odor of hydrogen sulfide. Water temperature was 51.5 degree Fahrenheit. The results of inorganic water quality analyses from the Keystone Hill Well performed by Avocet, showed all measured parameters to be below Health's maximum contaminant levels (MCL) required for safe drinking water.

Volatile Organic Test Results

Analysis performed by Anatek Labs, Inc shows all measured parameters to be below the detection level for each compound.

Synthetic Organic Test Results

Analysis performed by Anatek Labs, Inc shows all measured parameters to be below the MCL for each compound. However, di(ethylhexyl)phthalate was detected at 2.91 ug/L which is below the MCL of 6 ug/L but exceeds the State reporting level of 1.3 ug/L. This compound was most likely introduced through the well construction or testing process and is probably does not originate in the aquifer. We recommend the Town resample the water for this compound after the well is put into service.

Radionuclide Test Results

Analysis performed by Energy Laboratories, Inc shows measured parameters to be below the MCL for gross alpha, gross beta, and radium 228.

Bacteriological Test Results

Bacteriological analysis results showed no coliform bacteria present.

Findings

The Keystone Hill Well

- produced 302 gpm for 24 hours; however, the pumping water level was within two feet of the top of the well screen.
- had a stabilized pumping water level for the last six hours of the test.
- is completed in a confined sand and gravel aquifer between 142 and 182 feet below ground surface.
- shows an aquifer transmissivity of about 79,000 gpd/ft.
- produces water of acceptable quality, which has a slight odor of hydrogen sulfide and a temperature of 51.5 degrees Fahrenheit.

Conclusions and Recommendations

Keystone Hill Well 1 fully penetrates a confined sand and gravel aquifer found between 143 and 182 feet below ground surface. This aquifer is positioned above sea level and receives recharge from precipitation falling on the surface of the ground, which then infiltrates through the confining layers into the aquifer. The aquifer recharge area consists of several square miles of Smith Prairie and likely discharges south toward the Town's Fort Casey Well Field and Crockett Lake.

Robinson, Noble & Saltbush recommends the Town install a production pump into the 8-inch riser pipe with the pump intake at a depth of about 150 feet below ground surface. The pump could be either a line shaft turbine or submersible turbine with a maximum discharge rate of 250 gpm with a pumping lift of 140 feet. If a submersible turbine is specified, the pump manufacturer should be contacted to determine if a shroud will be required to provide sufficient cooling for the submersible motor.

Water levels must be closely monitored until the well's operational characteristics are fully understood by the Town's operator. We recommend the Town measure the well's static water level monthly, starting as soon as possible, in order to determine the amount of seasonal water level fluctuation in the aquifer. Once the well is in operation, the Town should also record the instantaneous pumping rate and total volume pumped each time a pumping water level is measured. The Town should plot this water level data at least annually to monitor the health of the aquifer and the wells efficiency.

Robinson, Noble & Saltbush recommends drilling additional wells, as needed, south from Well 1 along Keystone Hill Road with spacing no closer that 500 feet between wells. At that distance, interference between wells will be less than one foot.

The statements, conclusions, and recommendations provided in this report are to be exclusively used within the context of this document. They are based upon generally accepted hydrogeologic practices and are the result of analysis by Robinson, Noble & Saltbush, Inc. staff. This report, including any attachments to it, is for the exclusive use of the Town of Coupeville. Unless specifically stated in the document, no warranty, expressed or implied, is made.

FIGURES

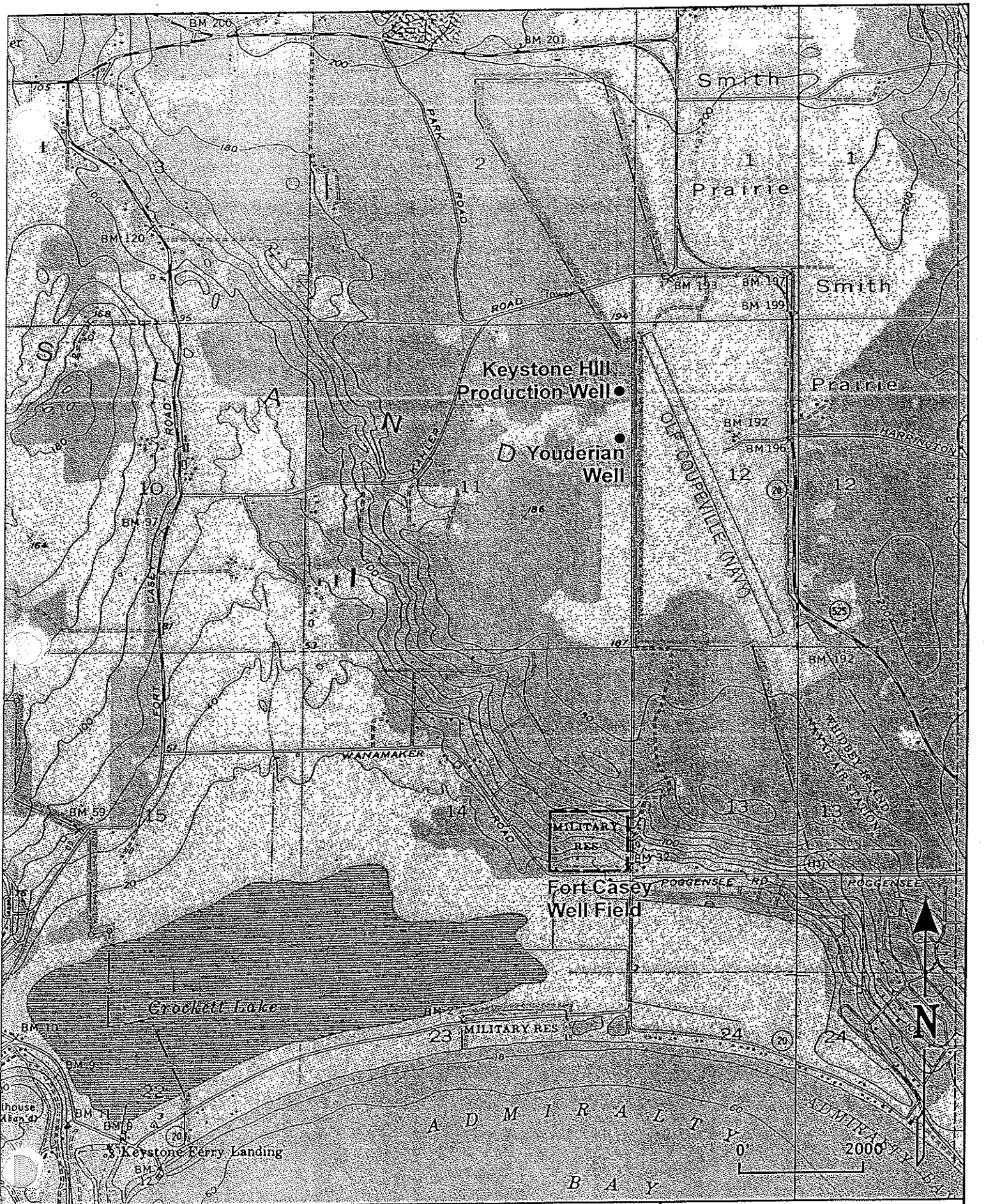

ROBINSON NOBLE SALTBUSH INC. GROUNDWATER & ENVIRONMENTAL SCIENTISTS 1947 60 Years 2007	Note: Basemap taken from USGS Coupeville Quadrange	PM: DCD April 2008	1205-005A Scale 1" = 2000'	Island County T 31 N/R 01 E - 11

Figure 1
Well Location Map
Town of Coupeville: Keystone Hill Production Well

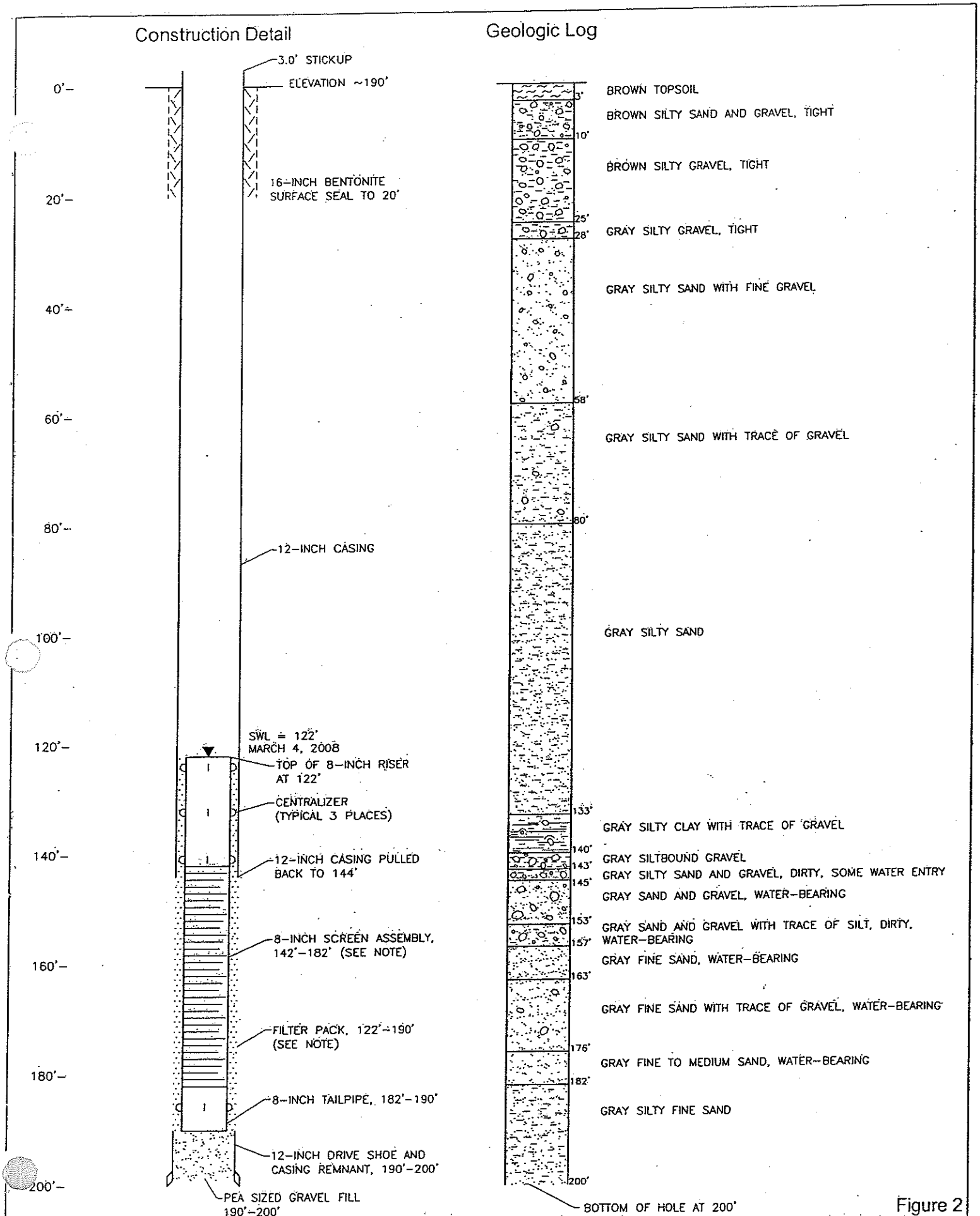

Figure 2

ROBINSON NOBLE SALTBUSH INC.
GROUNDWATER & ENVIRONMENTAL SCIENTISTS

PM: DCD
April 2008
Island County

Note: Well screen is 8-inch diameter pipe size, 40-slot (0.040-inch opening), type 304 stainless steel. Filter pack is

Construction Detail and Geologic Log for Keystone Hill Production Well
Town of Coupeville

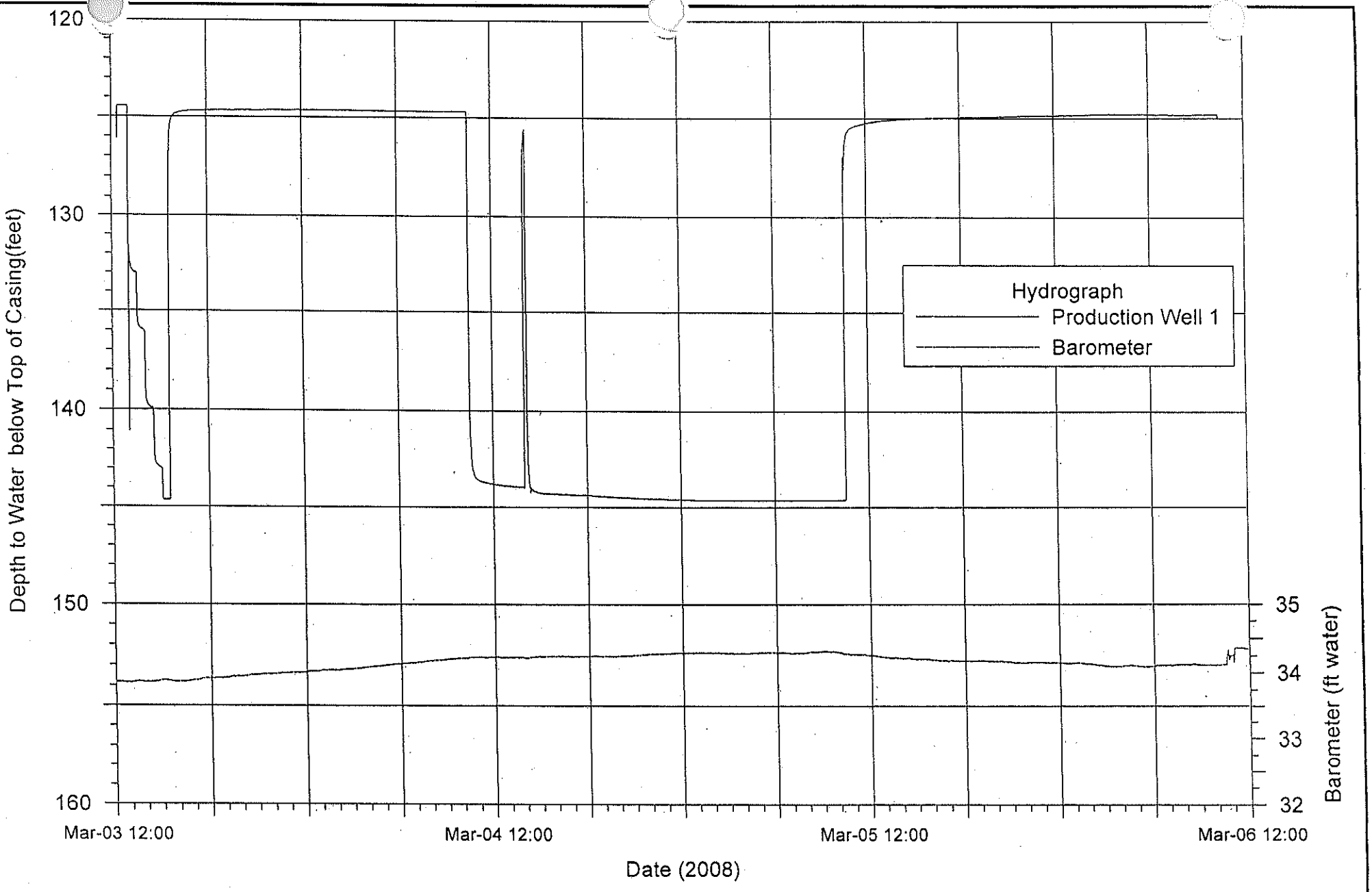

ROBINSON NOBLE SALTBUSH INC.
GROUNDWATER & ENVIRONMENTAL SCIENTISTS
1947 60 Years 2007

Date: 03/08
Job#: 1205-005A
PM: DCD

Pressure Transducer
Hydrograph (03/03/08-03/06/08)
One minute intervals

Figure 3
Coupeville: Keystone Hill Well 1 Hydrograph

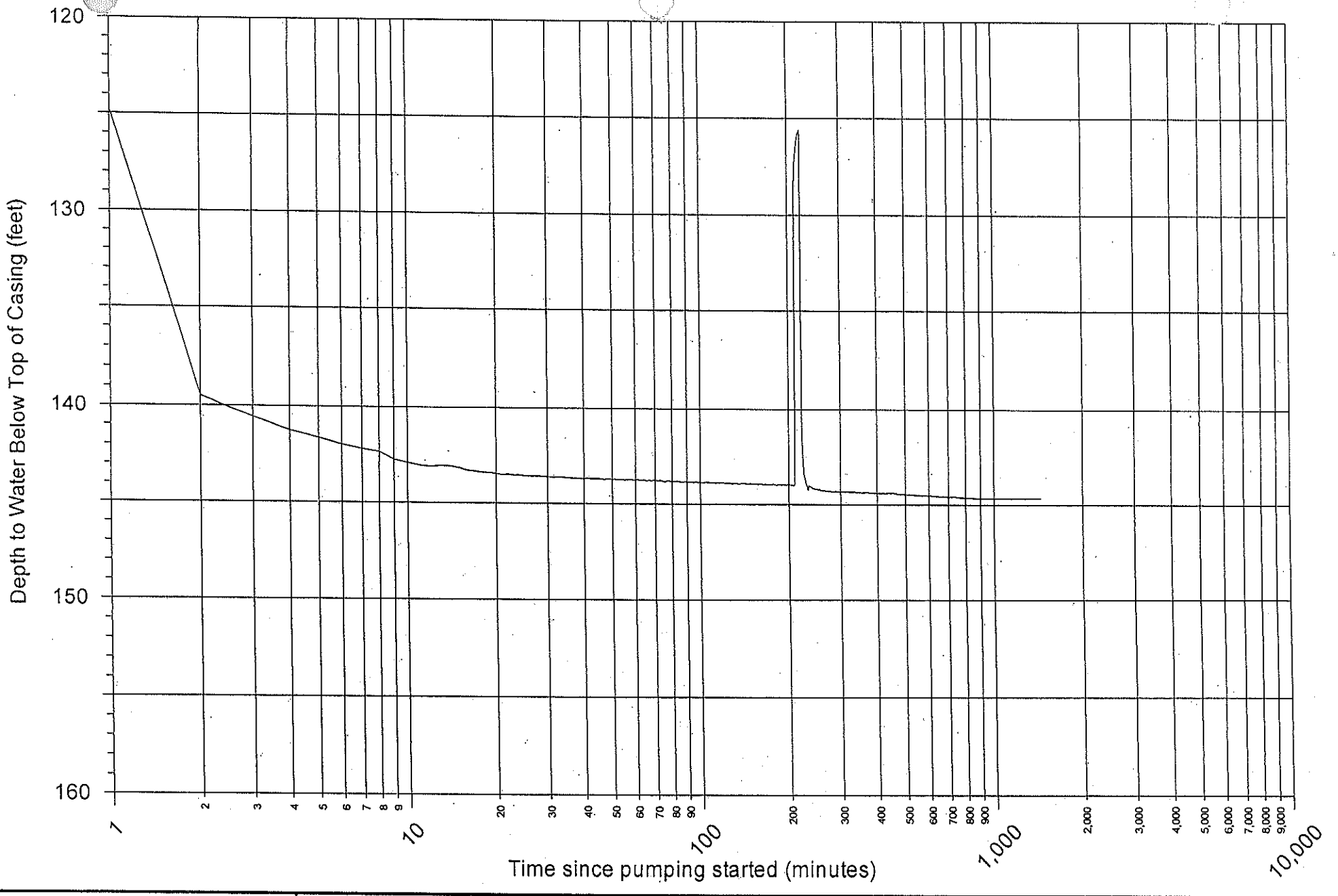

ROBINSON NOBLE SALTBUSH INC.
GROUNDWATER & ENVIRONMENTAL SCIENTISTS
1947 60 Years 2007

Date: 03/08
Job#: 1205-005A
PM: DCD

Coupeville: Keystone Hill Production Well 1
Drawdown Plot (03/04/08-03/05/08)
Average pumping rate: 302 gpm, SWL= 125.08 ft btc

Figure 4

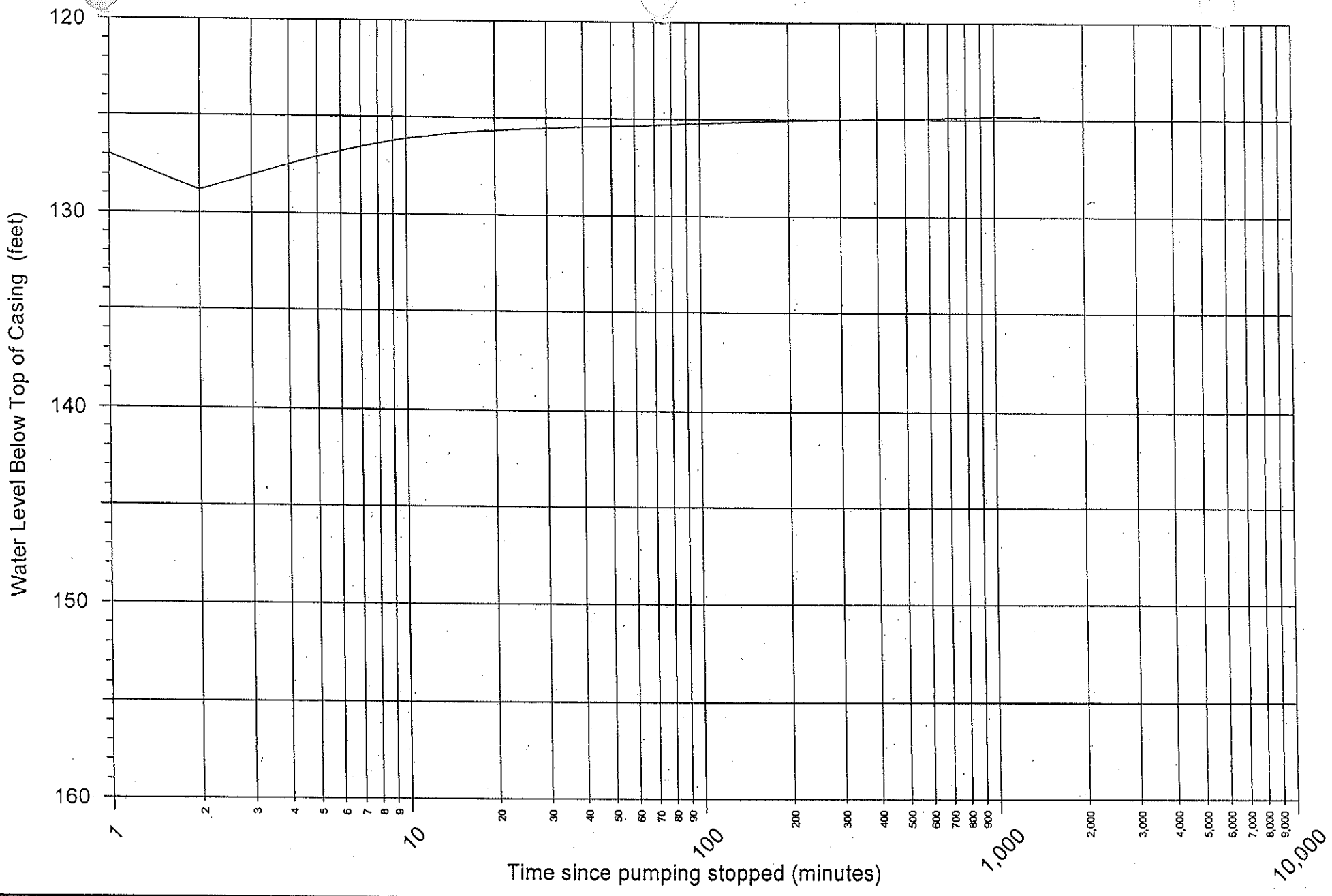

ROBINSON NOBLE SALTBUSH INC.
GROUNDWATER & ENVIRONMENTAL SCIENTISTS
1947 60 Years 2007

Date: 03/08
Job#: 1205-005A
PM: DCD

Coupeville: Keystone Hill Production Well 1
Recovery Plot (03/05/08-3/06/08)
Pre-Test SWL + 125.08 ft. btc

Figure 5

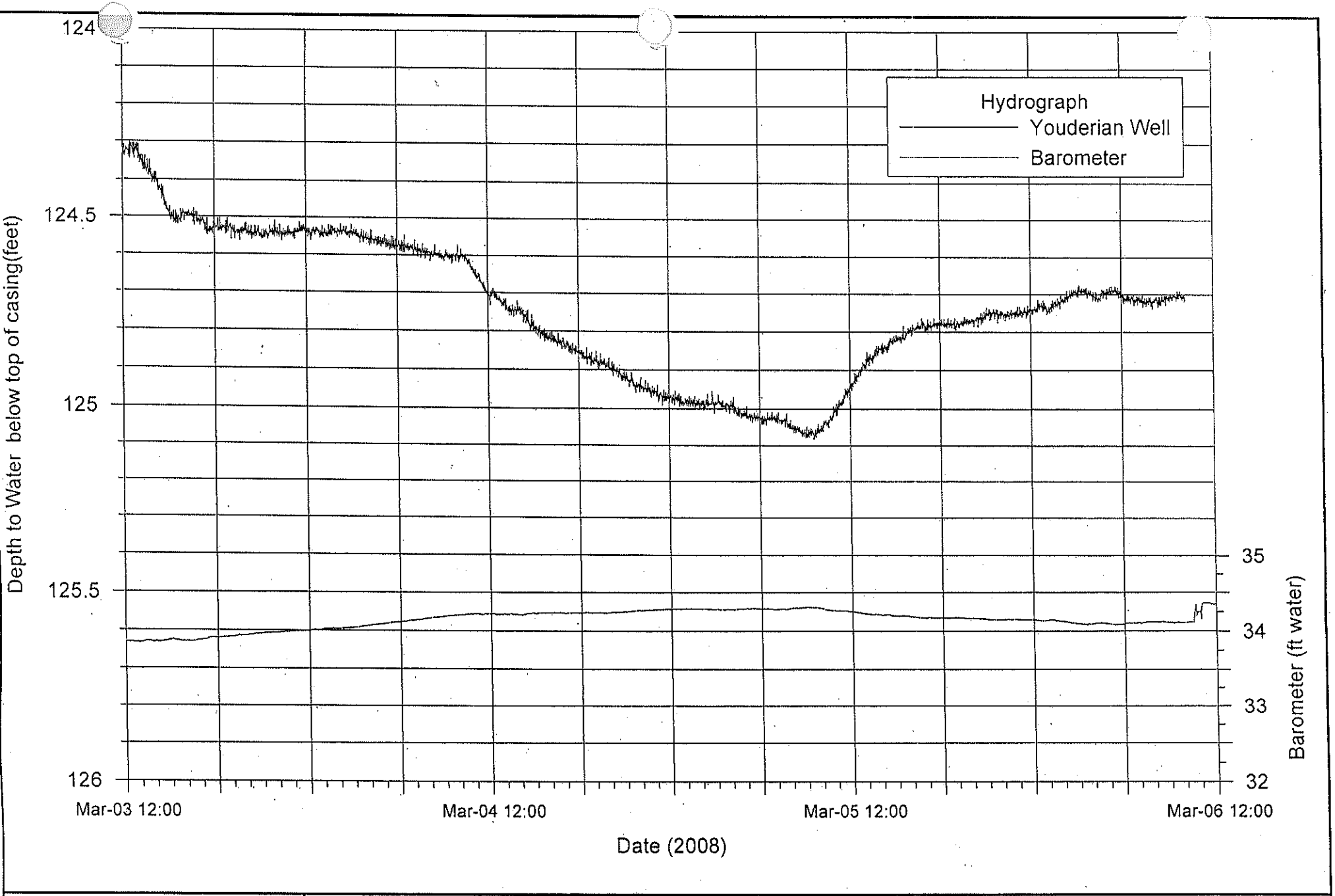

ROBINSON NOBLE SALTBUSH INC.
GROUNDWATER & ENVIRONMENTAL SCIENTISTS
1947 60 Years 2007

Date: 03/08
Job#: 1205-005A
PM: DCD

Pressure Transducer
Hydrograph (03/03/08-03/06/08)
One minute intervals
SWL= 124.6 ft btc

Figure 6
Coupeville: Youderian Observation Well Hydrograph

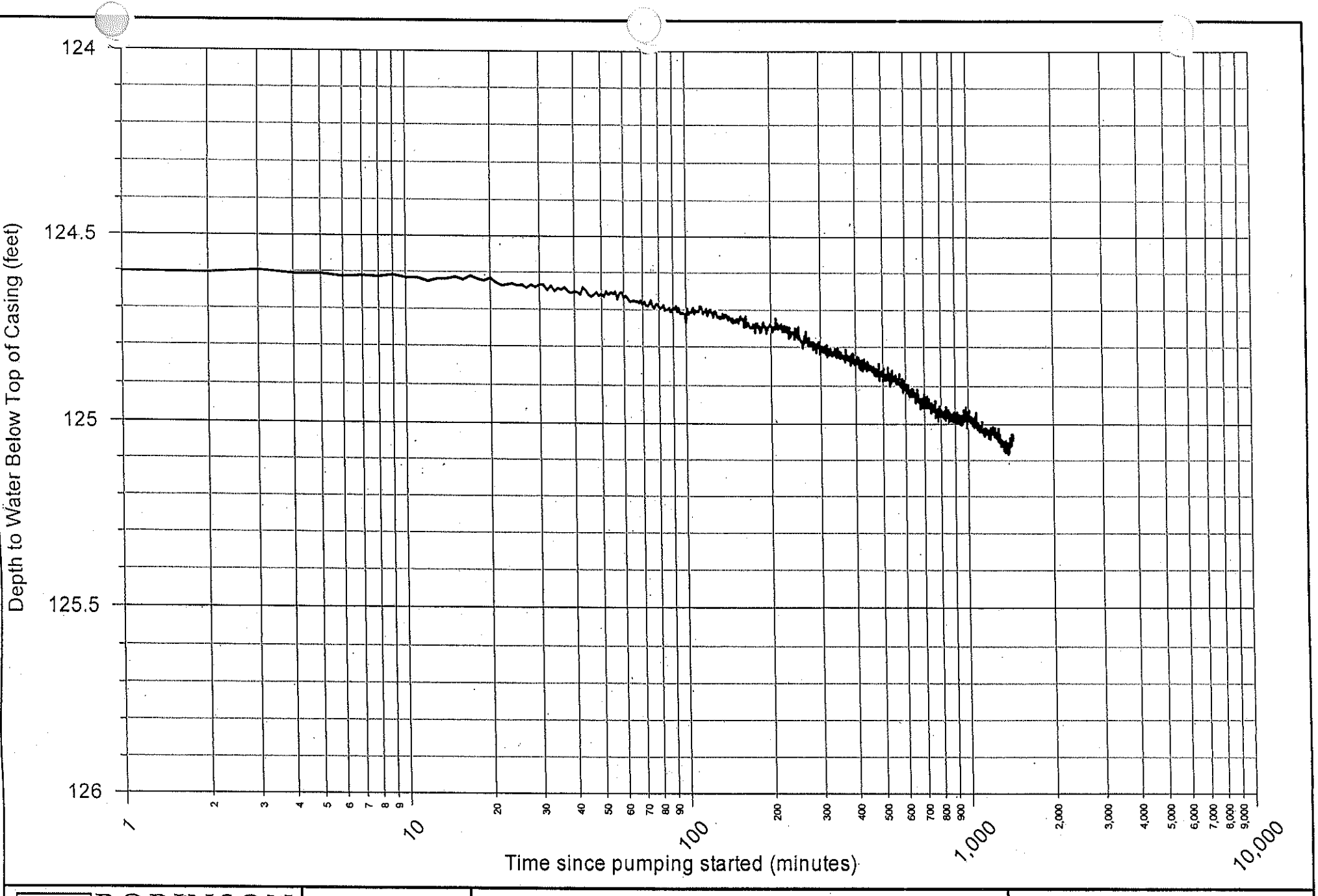

ROBINSON NOBLE SALTBUSH INC.
GROUNDWATER & ENVIRONMENTAL SCIENTISTS
1947 60 Years 2007

Date: 03/08
Job#: 1205-005A
PM: DCD

Coupeville: Youderian Observation Well
Drawdown Plot (03/04/08-03/05/08)
SWL= 124.6 ft btc

Figure 7

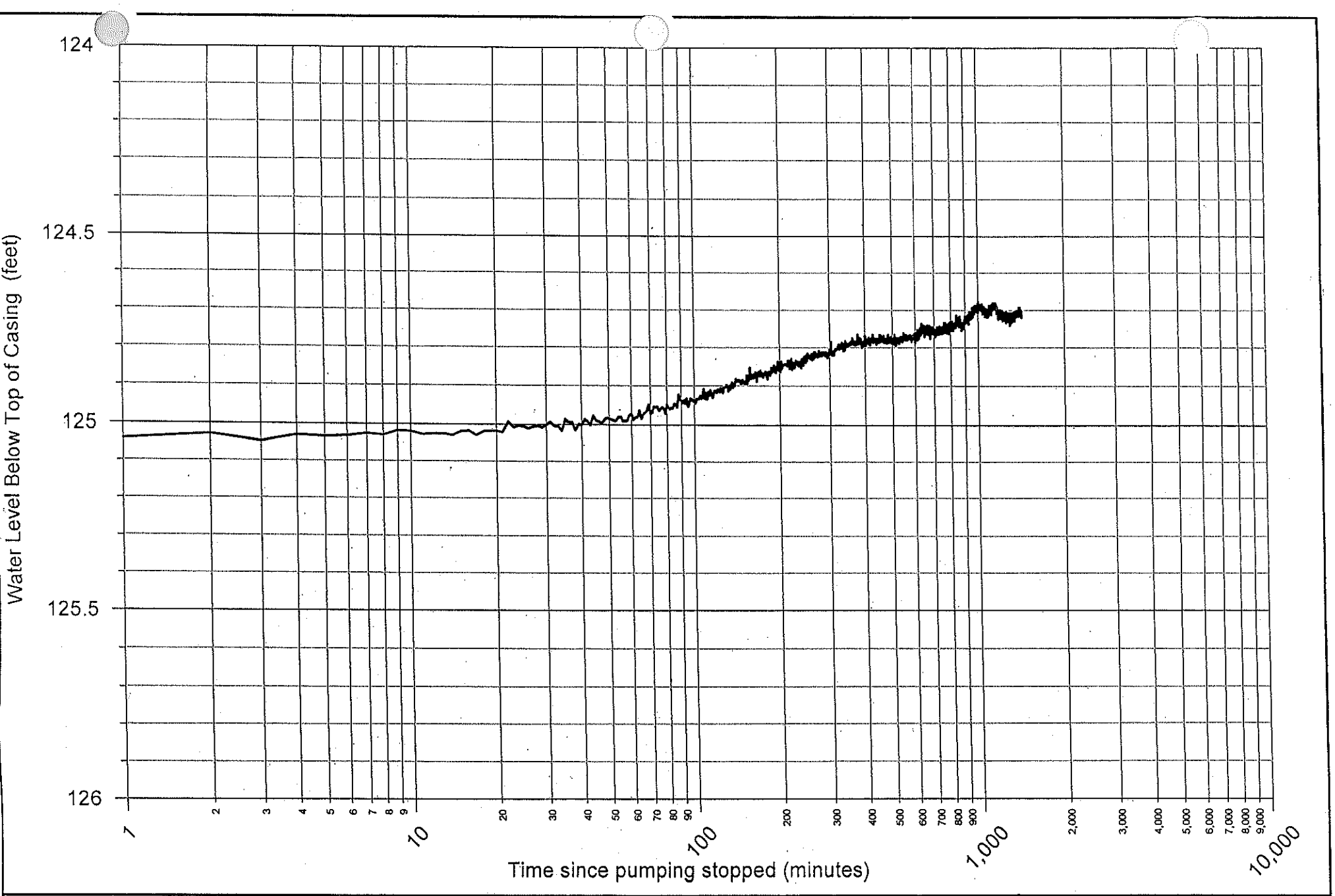

ROBINSON NOBLE SALTBUSH INC.
GROUNDWATER & ENVIRONMENTAL SCIENTISTS
1947 60 Years 2007

Date: 03/08
Job#: 1205-005A
PM: DCD

Coupeville: Youderian Observation Well
Recovery Plot (03/05/08-3/06/08)
SWL= 124.6 ft btc

Figure 8

ROBINSON NOBLE SALTBUSH INC. Established 1947
GROUNDWATER & ENVIRONMENTAL SCIENTISTS

TOWN OF COUPEVILLE
WELL 1-06
CONSTRUCTION AND TESTING REPORT

OCTOBER 2006

by

Douglas C. Dow, L.HG.
Senior Associate Hydrogeologist

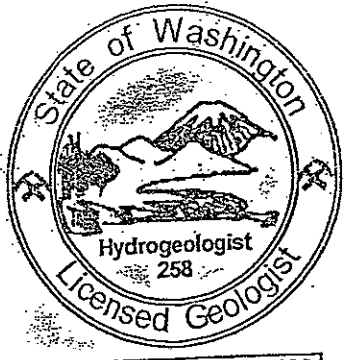

3011 South Huson Street, Suite A Tacoma, Washington 98409 • (253) 475-7711 • Fax: (253) 472-5846

TOWN OF COUPEVILLE
WELL 1-06
CONSTRUCTION AND TESTING REPORT
OCTOBER 2006

Table of Contents

INTRODUCTION 1

BACKGROUND 1

WELL TESTING 1

- PUMPING TEST RESULTS 1
  - *Transmissivity* 2
- WATER QUALITY TESTING 2
  - *Inorganic Test Results* 2
  - *Volatile Organic Test Results* 2
  - *Bacteriological Test Results* 3

SALTWATER INTRUSION POTENTIAL 3

FINDINGS 3

CONCLUSIONS AND RECOMMENDATIONS 4

FIGURES

FIGURE 1 – LOCATION MAP
FIGURE 2 – LITHOLOGIC LOG AND WELL COMPLETION DETAILS
FIGURE 3 – HYDROGRAPH FOR WELL 1-06
FIGURE 4 – WELL 1-06 DRAWDOWN DATA, 24-HOUR TEST
FIGURE 5 – WELL 1-06 RECOVERY DATA, 24-HOUR TEST

APPENDIX

WATER WELL REPORT FORM FOR WELL 1-06
MANUAL WATER LEVEL MEASUREMENTS
LABORATORY WATER QUALITY RESULTS

TOWN OF COUPEVILLE
WELL 1-06
CONSTRUCTION AND TESTING REPORT
OCTOBER 2006

Introduction

This report presents Robinson, Noble & Saltbush's findings and recommendations based on observation of construction, well screen design and development, and conducting a pumping test of Production Well 1-06 for the Town of Coupeville (Town) on Whidbey Island, Washington. The Washington State Department of Health (Health) requires hydrogeologic evaluation of 24-hour, constant-rate, individual well tests prior to source approval. A Robinson, Noble & Saltbush hydrogeologist prepared a test plan, assisted with testing, and evaluated the test results. The Town's drilling Contractor, Well Done Drilling of Whidbey Island, conducted the test and collected required water quality samples analyzed by Edge Analytical laboratory.

Background

Well 1-06 is located in the Town's Fort Casey Wellfield, in Township 31 North, Range 1 East, NE4, SE4, Section 14 on Whidbey Island (**Figure 1**). The hydrogeologic log and completion details are shown on **Figure 2** and the well's Water Well Report form in the **Appendix**. The Town has water rights for the Fort Casey wellfield, certificate number 5618-A, with a maximum instantaneous withdrawal rate (Qi) of 150 gallons per minute (gpm) and annual quantity (Qa) of 158 acre feet per year (af/yr).

Well 1-06 is completed with stainless-steel well screens installed between 175 and 200 feet below ground surface (bgs) at elevations of 14 to 39 feet below sea level in a gray sand aquifer. The static water level elevation is approximately eight feet. This 8-inch well is located approximately 1,600 feet northeast of Crockett Lake and 3,600 feet north of Admiralty Bay at a surveyed ground surface elevation of 160.61 feet.

Well Testing

The Town installed a ¾-horsepower submersible pump and started the 24-hour test of Well 1-06 on June 15, 2006 at 10:14 a.m. Town Well 1-90, located 957.30 feet east, is completed in the same aquifer (see **Figure 2**) and was reported to be operating constantly during the test. Water levels were not monitored in Well 1-90 because of the continuous pumping. Well 1-90 was shut off on June 18 after over 24 hours of recovery from the Well 1-06 test. There is a water level rise of about one-half foot in Well 1-06 shown on **Figure 3** after Well 1-90 was shut off on the 18th. This may be related to the Well 1-90 recovery.

Pumping Test Results

Test results are shown in **Figures 3, 4** and 5. Well 1-06 was pumped for 24 hours at an average rate of 45 gpm. It took a couple of hours to arrive at a steady pumping rate that would last for the balance of the 24-hour test. At the end of the 24 hours, the water level drawdown below the static water

level of 154 feet was 21.60 feet, indicating a specific capacity of about two gpm/ft of drawdown. As shown on **Figures 3** and **4**, the pumping water level at the end of the 24-hour test was 175.60 feet and had reached stabilization. Stabilization is defined by Health as less than 0.10 feet of drawdown per hour during the last four hours of testing. The manual water level data included in the **Appendix** shows less than 0.10 feet of drawdown per hour for the last 13 hours of the test. The aquifer was not impacted by tidal changes.

The pumping water level after 24 hours was within two feet of the top of the well screen. The pumping water level in a high production well should never be allowed to draw down inside the well screen. This practice can cause cascading water, air entrainment, reduced well efficiency, increased encrustation potential, and shorter well life.

Transmissivity

Transmissivity (T) represents the permeability for the full-aquifer thickness and is equivalent to the amount of water flowing through a vertical, one-foot wide strip of the aquifer in one day (under unit gradient). It is calculated from drawdown and recovery patterns, such as those illustrated in **Figures 4** and **5**. The transmissivity was calculated using the Jacob/Theis, modified, non-equilibrium formula from the pumping rate and the slope of the drawdown and recovery graphs. The average transmissivity calculated for the Fort Casey Aquifer at Well 1-06 is about 4,500 gpd/ft.

The transmissivity at this location is much higher than at Well 1-90 (1,300 gpd/ft) because the aquifer sand is coarser and more permeable at this location. The difference is also demonstrated by each well's specific capacity which is 2.0 gpm/ft of drawdown for Well 1-06 and 1.0 gpm/ft for Well 1-90.

Water Quality Testing

Water samples were collected for at 1, 4, 12, 16, and 24 hours and sent to Edge Analytical for chloride and specific conductivity analysis. Samples for drinking water laboratory analysis were collected after pumping for 24 hours at 45 gpm. Laboratory reports are included in the **Appendix**.

Inorganic Test Results

Water pumped during the test was sand free and had a slight odor of hydrogen sulfide. The results of inorganic water quality analyses from Well 1-06, completed by Edge Analytical laboratory, showed all measured parameters with the exception of arsenic, manganese, and electrical conductivity to be below Health's maximum contaminant levels (MCL) required for safe drinking water. The arsenic result of 0.017 mg/L exceeds the MCL of 0.010 set for drinking water. The manganese test result exceeds the MCL of 0.05 mg/L with a value of 0.113 mg/L. Manganese is a secondary contaminant and is not a known health hazard. The electrical conductivity value of 768 uS/cm is just above the MCL of 700 uS/cm. As shown on **Table 1**, the electrical conductivity and chloride values were declining throughout the 24-hour test.

Volatile Organic Test Results

Analysis performed by Edge Analytical shows all measured parameters to be below the detection level for each compound.

Bacteriological Test Results

Bacteriological analysis results showed no total or fecal coliform bacteria present. Testing did show the presence of iron-related and sulfate-reducing bacteria. These types of bacteria can cause well plugging and water treatment system filtration problems.

Saltwater Intrusion Potential

Since this well is located within approximately one-half mile of saltwater, it is considered at risk and must be monitored for saltwater intrusion during testing. Water quality testing for chloride and specific conductance is required at 1, 6, 12 and 24 hours. The Contractor collected samples at the times shown in **Table 1**. Operation of Well 1-06 showed slightly decreasing chloride and conductivity levels in the aquifer, as shown on the water quality results listed in **Table 1**. Laboratory results are included in the **Appendix**.

Table 1 Well 1-06 Water Quality Test Results

Sample Collection Time	Chloride (mg/L)	Electrical Conductivity (uS/cm)
1 hour	62	816
4 hours	60	817
12 hours	56	792
16 hours	54	787
24 hours	55	780
24 hours	52	768 (full inorganic sample)

Well 1-06 is not tidal and did not exhibit increasing levels of chloride and conductivity during testing. Previous testing of Well 1-90 showed similar water quality test results. The aquifer at the Fort Casey Wellfield does not appear to be impacted by sea water intrusion. Withdrawal of water from Wells 1-90 and 1-06 at the northern property line reduces the potential for seawater intrusion into the aquifer.

Findings

- Well 1-06 is capable of pumping 45 gpm for 24 hours; however, the pumping water level was within two feet of the top of the well screen.
- Well 1-06 is completed in a confined sand aquifer between 14 and 39 feet below sea level.
- The static water level elevation is about 8 feet.
- The aquifer does not respond to tidal influence.
- Aquifer transmissivity is about 4,500 gpd/ft.
- Crockett Lake is about 1,600 feet from Well 1-06.
- Admiralty Bay is about 3,600 feet from the well.
- Water quality samples collected from Well 1-06 and analyzed for chloride and conductivity showed slightly decreasing levels during the 24-hour test period.

- The water has a slight odor of hydrogen sulfide.
- Electrical conductivity, manganese and arsenic exceeded the MCLs set for safe drinking water.
- Water quality testing showed the presence of iron-related and sulfate-reducing bacteria.

Conclusions and Recommendations

The Fort Casey aquifer and wellfield are capable of providing the Town's water right amounts of 150 gpm and 158 af/yr without increasing the wellfield's potential to induce salt water. However, the discharge from Well 1-06 should be limited to approximately 45 gpm to keep the pumping water level above the top of the well screen. Water levels must be closely monitored until the well's operational characteristics are fully understood by the Town's operator.

The water treatment plant at the Fort Casey wellfield will be able to reduce the arsenic, manganese, and electrical conductivity levels below the MCLs. Bacteria in the water that can cause plugging of well screens and water filters should be monitored closely. We recommend periodic sampling that quantifies the amount of bacteria in the water rather than a presence or absence test. Controlling small quantities by chlorinating periodically is better than expensive cleaning when quantities of bacteria become too large and start plugging the well screen and water filtration plant.

We recommend drilling one more well along the north side of the Fort Casey wellfield property half way between Wells 1-06 and Well 1-90. It should be constructed similar to Wells 1-90 and 1-06 with 8-inch well casing and stainless-steel well screens.

We recommend the Town continue to measure each well's static and pumping water levels at least monthly and record the instantaneous pumping rate and total volume pumped each time a pumping water level is measured.

The statements, conclusions, and recommendations provided in this report are to be exclusively used within the context of this document. They are based upon generally accepted hydrogeologic practices and are the result of analysis by Robinson, Noble & Saltbush, Inc. staff. This report, including any attachments to it, is for the exclusive use of the Town of Coupeville. Unless specifically stated in the document, no warranty, expressed or implied, is made.

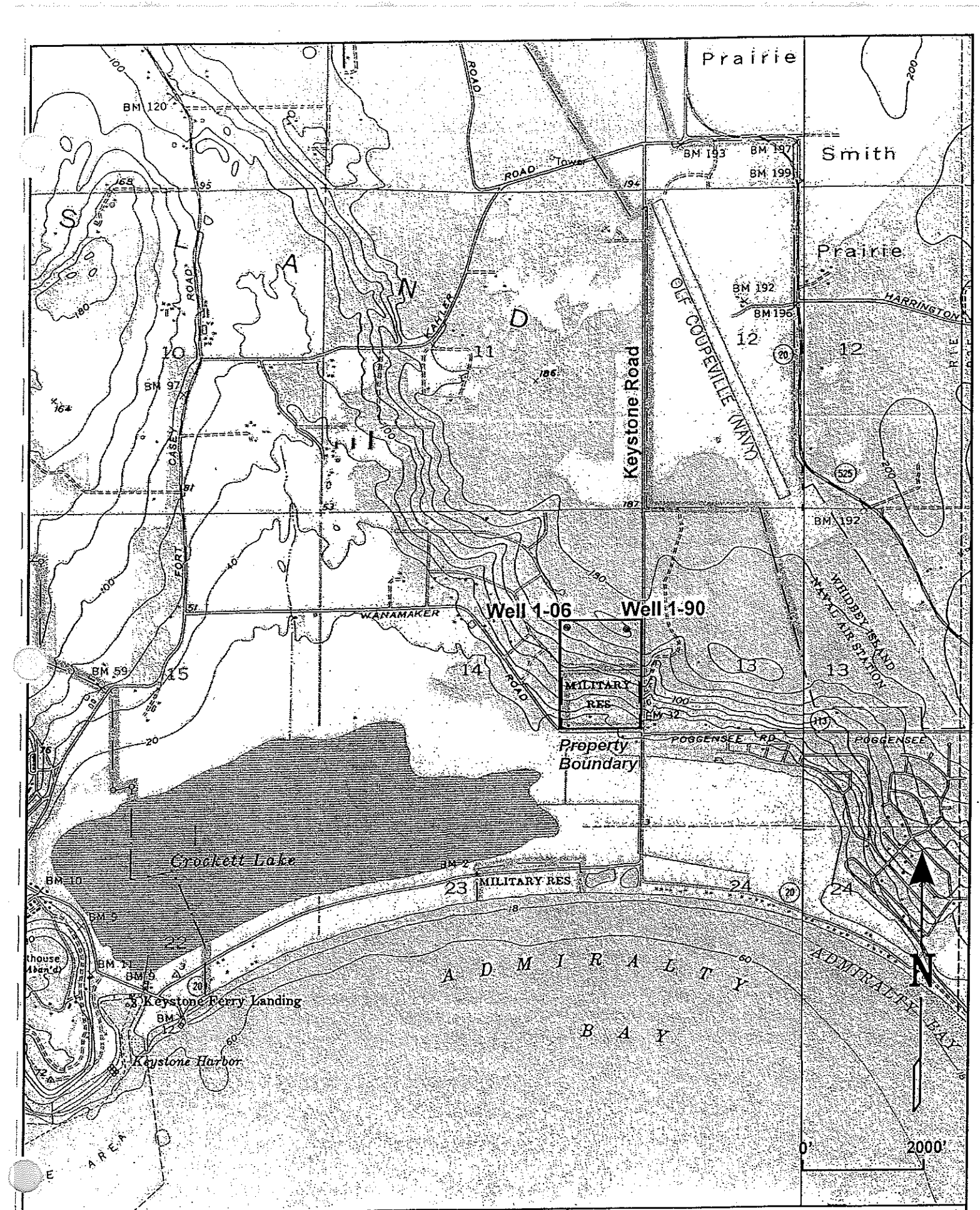

ROBINSON NOBLE SALTBUSH INC. GROUNDWATER & ENVIRONMENTAL SCIENTISTS	Note: Basemap taken from USGS Coupeville Quadrange	PM: DCD November 2006 1205-004A	Island County T 31 N/R 1 E - 14 Scale 1" = 2000'	Figure 1 Well Location Map Town of Coupeville:Well 1-06 Test Report

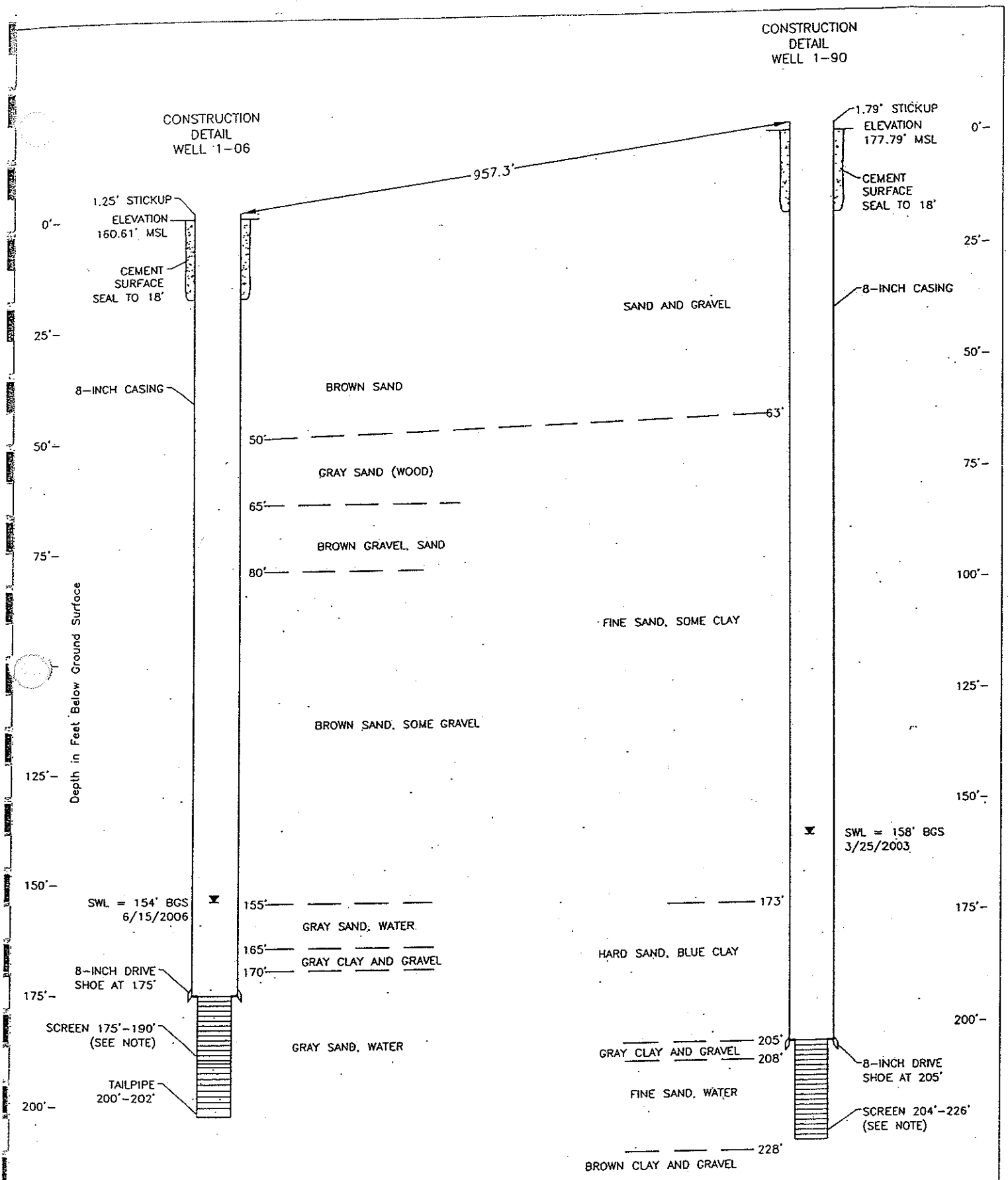

NOTE:
WELL SCREEN AT 175'-190' IS 12-SLOT (0.012-INCH OPENING) SCREEN AT 190'-200' IS 15-SLOT (0.015-INCH OPEN) BOTH ARE 8-INCH TELESCOPE STAINLESS STEEL.

NOTE:
WELL SCREEN IS 8-INCH PIPE SIZE, 12-SLOT (0.012-INCH OPENING) STAINLESS STEEL.

ROBINSON NOBLE SALTBUSH

PM: DCD
October 2006

Island County
T 31 N/R 1 E - 14

Figure 2
Construction Profile of Fort Casey Wellfield

Robinson & Noble, Inc.
3011 South Huson Street, Suite A
Tacoma, WA 98409
253-475-7711

PUMPING TEST DATA

Page: 1 of 2
Date: 6-15-06

Project: Coupeville
Well: 1-06
Static Water Level: 154.00
Stick Up: 1.30'
Reference Point: To Well Seal
Measurement Device: Elec. Tape + Data Logger

Project Number:
Weather Conditions:
Measured By: DCD
Contractor: Well Done Drillers
Pump Type: Sub
Flow Meas. Method: 6 gal Bucket & Watch

Time	Elapsed Time	Depth to Water	Drawdown	Flow Meas. Reading	Q (gpm)	Comments
1014	0	154.00	0	—		
1024	10	168.45			51	Set Data Logger & Baro
1034	20	169.50			51	7 sec / 6 gal
1054	40	163.73				Trouble measuring wl. Adj. Q
1104	50	171.95			51	
1114	60	172.75				WQ Sample
1134	80	173.72				Temp 52°F
1154	100	174.35			51	Semi Log - Test Won't Hold 51 for 24
1229	135	173.24			45	8 sec / 6 gal
1234	140	173.22				
1254	160	173.30				
1314	180	173.44			45	
1344	210	173.65				
1414	240	173.85				
1444	270	174.04				
1514	300	174.17				
1614	360	174.35			45	
1710	416	174.40				
1800	466	174.60				
1845	511	174.75				

Robinson & Noble, Inc.
3011 South Huson Street, Suite A
Tacoma, WA 98409
253-475-7711

PUMPING TEST DATA

Date: 6/16/96

Project: Coupeville
Well: 1-86
Static Water Level: 154
Stick Up: 1.3
Reference Point: To Well Seal
Measurement Device: Elec Tape + Data Logger

Project Number:
Weather Conditions:
Measured By:
Contractor: Well Done Drilling
Pump Type: Sub
Flow Meas. Method: 6 gal Bucket & watch

Time	Elapsed Time	Depth to Water	Drawdown	Flow Meas. Reading	Q (gpm)	Comments
1930	556	174.85				
2000	586	175.05				
2100	646	175.20				
2200	706	175.25				
2400	826	175.30				
0100	886	175.35				
0200	946	175.40				
0300	1006	175.43				
0600	1186	175.47				
0800	1306	175.50				
1014	1440	175.60				9/5 = 2.08
1114	1500	175.60	21.60		4/5	Pump off
1129	1515	162.50				
0844	7110	153.25				Remove Data Logger & Baro

1/5
6/16
6/20

Appendix H

Booster Pump Curve(s)
(Proposed Pennington Hill Station)

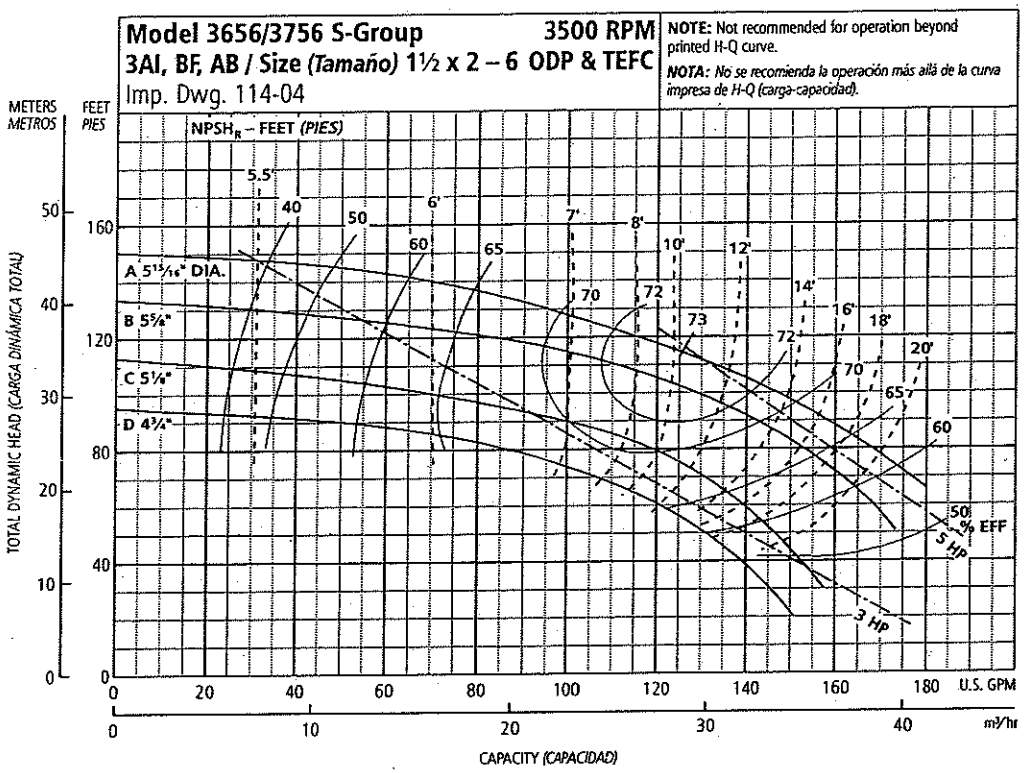

Optional Impeller *Impulsor optativo*	
Ordering Code ***Código de pedido***	**Dia.** ***Diá.***
A	5 15/16"
B	5 5/8"
C	5 1/8
D	4 3/4

NOTE: Pump will pass a sphere to 5/16" diameter.

NOTA: *La bomba dejará pasar una esfera de hasta 5/16 de pulgada de diámetro.*

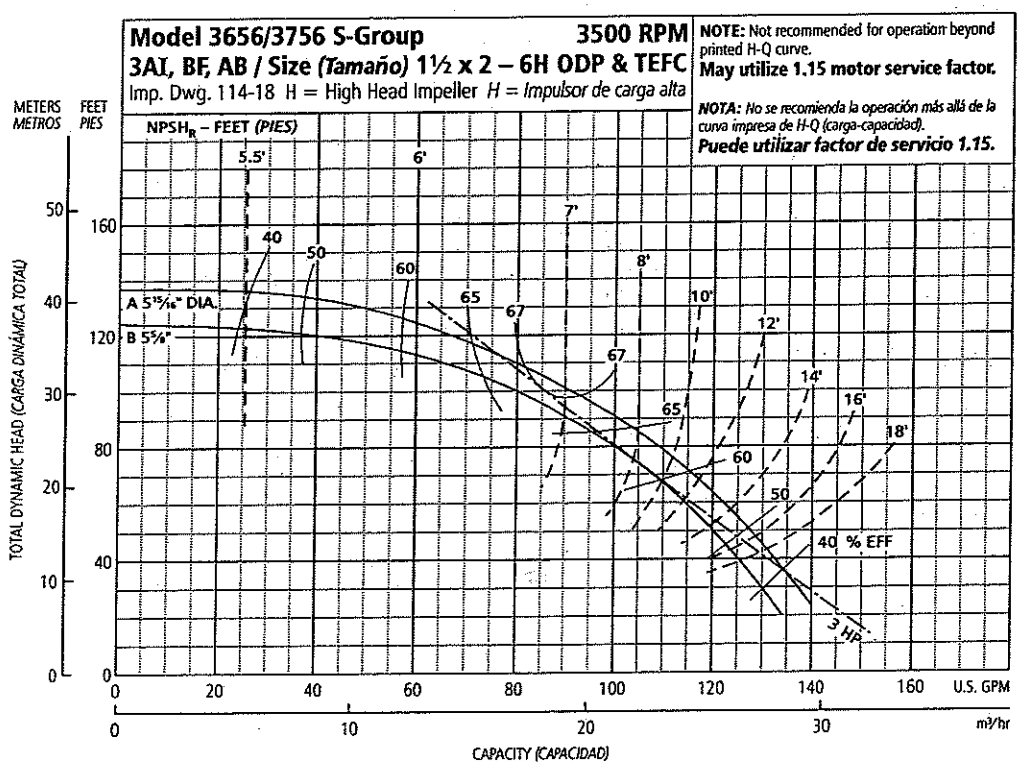

Optional Impeller *Impulsor optativo*	
Ordering Code ***Código de pedido***	**Dia.** ***Diá.***
A	5 15/16"
B	5 5/8

NOTE: Pump will pass a sphere to 3/16" diameter.

NOTA: *La bomba dejará pasar una esfera de hasta 3/16 de pulgada de diámetro.*

Appendix I

County Franchise Agreement

4186585
Page: 1 of 9
11/08/2006 03:37P
ISLAND COUNTY AUDITOR FRA

After Recording Return to:
Island County Engineer

FRANCHISE

ISLAND COUNTY
WASHINGTON

Franchise #341

THIS FRANCHISE CONSOLIDATES AND SUPERCEDES FRANCHISE NUMBERS 99(3), AND 99(4)

Town of Coupeville
Sections 30, 31, 32, 33, 34, and 35,
Township. 32 North, Range. 1 East
Sections 2, 3, 4, 5, 6, 8, 9, 10, 11,
12, 13, 14, 15, 16, 21, 22, and 23,
Township. 31 North, Range 1 East

In the Matter of the Application of

Town of Coupeville, a municipal corporation, for a franchise to construct, operate and maintain an existing water distribution system (hereinafter referred to as "Facility") in, along, under and/or across County roads located within the service area of the Town of Coupeville all being located in the South Half (S½) of Section 30, all of Sections 31, 32, 33, 34, and 35, Township 32 North, Range 1 East, and the West Half (W½) of Section 12, all of Sections 2, 3, 4, 5, 6, 8, 9, 10, 11, 13, 14, 15, 16, 21, 22, and 23, Township 31 North, Range 1 East, W.M., Island County, Washington, (hereinafter known as "Franchise Area").

The application of Town of Coupeville, its successors and assigns, for a franchise to construct, operate, and maintain the existing Facility in, along, under and/or across the Franchise Area having come on regularly for hearing on the 2nd day of October, 2006 before the County Commissioners of Island County, Washington under the provisions of Chapter 36.55 RCW Franchises on Roads and Bridges as now in effect or as hereafter amended, and it appearing to the County Commissioners that notice of said hearing, as required by law, has been duly given and that it is for the public interest to grant the franchise herein granted; it is

ORDERED that a franchise be and the same hereby is given and granted to Town of Coupeville, its successors and assigns (hereinafter referred to as the "Holder") to construct, operate and maintain the existing Facility, together with the necessary laterals and service connections in, along, under and/or across the Franchise Area for a period of time to expire on the 2nd day of October, 2031 subject to the terms and conditions hereinafter enumerated.

INDEX

Section One	*Definitions*
Section Two	*Facilities Within Franchise Area*
Section Three	*Non-Interference of Facilities*
Section Four	*Relocation of Facilities*
Section Five	*Maintenance and Construction of Facilities*
Section Six	*Indemnification*
Section Seven	*Compliance with Federal, State and Local Regulations*
Section Eight	*Annexations and Vacation*
Section Nine	*Default and Revocation*
Section Ten	*Non-Exclusive Franchise*
Section Eleven	*Franchise Term*
Section Twelve	*Assignment*
Section Thirteen	*Subletting*
Section Fourteen	*Severability*
Section Fifteen	*Modification and Amendment*
Section Sixteen	*Miscellaneous*

Section One – Definitions

1. When used in this franchise, unless otherwise indicated:

   a. "Holder" means Town of Coupeville, a municipal corporation, its successors and assigns.

   b. "County" means Island County, Washington

   c. "Facilities" means all components of the water distribution system located within County Road Right-of-way.

   d. "Franchise Area" means the County roads located within the service area of the Town of Coupeville all being located in the South Half (S½) of Section 30, all of Sections 31, 32, 33, 34, and 35, Township 32 North, Range 1 East, and the West Half (W½) of Section 12, all of Sections 2, 3, 4, 5, 6, 8, 9, 10, 11, 13, 14, 15, 16, 21, 22, and 23, Township 31 North, Range 1 East, W.M., Island County, Washington.

Section Two – Facilities within Franchise Area

1. Under the provisions of Chapter 36.55 RCW Franchises on Roads and Bridges and the Island County Code, the County hereby grants to the Holder subject to the terms and conditions set forth hereinafter, a Franchise for twenty-five (25) years, commencing upon the effective date of this Franchise.

2. In constructing, operating, maintaining and repairing said Facilities the Holder shall conform to applicable ordinances and to policies or requirements made by the Island County Engineer, or any County department or officers authorized to supervise and regulate such work and utility for the protection and safety of the public.

3. Requirements as established by individual departments of Island County shall become part of this franchise.

4. The County does hereby grant to the Holder the right, privilege, authority to construct, maintain, repair and replace Facilities in, upon, over, under, along, under, and/or across Franchise Area.

Section Three – Non-Interference of Facilities

1. Said Facilities shall at all times be constructed and maintained so as not to interfere with the use of the County road for travel or maintenance.

2. Any and all damage or injury done or caused to said county road right-of-way or any portion thereof in the construction, operation, maintenance or repair of said Facility shall be immediately repaired and reconstructed under the supervision and to the satisfaction of the Island County Engineer; and in the event the Holder shall fail, neglect or refuse to immediately repair and reconstruct said damage, or injury to said county road right-of-way, the same may be done by the County and the expense and cost thereof shall immediately be repaid by the Holder to the County. In performing any such repairs, neither the County nor any of its employees, agents or subcontractors shall be deemed to be an employee, agent, or subcontractor of the Holder.

3. The Holder of this franchise, when contemplating work upon, along, over, under or across county right-of-way, shall first file with the Island County Engineer its application for permits to do such work. Such applications shall be accompanied by drawings and information as required by the Island County Engineer. Plans, drawings, and specifications for all utility lines lying within the County right-of-way shall be prepared and approved by a licensed engineer at the expense of the Holder. One copy of plans for constructed work, including as-built construction changes and notations, shall be on file with the office of the County Engineer. No application for work shall be approved without this requirement being met.

4. A copy of the permit and franchise must be on the job site, and protected from the elements, at all times during any of the construction authorized by said permit and franchise.

5. All slopes must be seeded and protected from erosion until the vegetation is reestablished.

6. All trenches, boring or jacking pits, etc. shall be backfilled as soon as possible and not left open during non-working hours unless covered with material of sufficient strength to withstand traffic loads or a method of protection approved by the Island County Engineer.

7. All slopes, slope treatment, topsoil, ditches, pipes, etc., disturbed by this operation shall be restored to their original cross-section and condition. All open trenches shall be marked by warning signs, barricades, lights, and if necessary, flagmen shall be employed for the purpose of protecting the traveling public. Roadside operations may be specified by the Island County Engineer's representative.

8. During the construction and/or maintenance of this Facility, the Holder shall comply with the *Manual on Uniform Traffic Control Devices for Streets and Highways (Federal Highway Administration)* and Washington modifications thereto. If determined necessary by the Island County Engineer, the Holder shall submit a signing and traffic control plan to the Island County Engineer's representative for approval prior to construction or maintenance operations. No lane closures shall be allowed except as approved by the Island County Engineer's representative. Approvals may cause revision of special provisions, including hours of operation.

9. Whenever deemed necessary by the Washington State Department of Labor and Industries and/or the Island County Public Works Department for the safety of the workers and the protection of the highway pavement, the sides of the trench (or

excavation) shall be adequately supported to reduce the hazard to workers and prevent any damage by cracks, settlement, etc., to the pavement. No other work in the trench or excavation area will be allowed until this requirement is met.

10. The Holder shall provide emergency call out response 24 hours a day, seven days a week. The response time shall be one hour. If the Holder does not respond in one hour, the Island County Engineer will bill the Holder for costs of additional flagging or traffic control, if deemed necessary, caused by the delay in response beyond one hour.

11. In the event any right-of-way marker, fence or guardrail is located within the limits of this project and will be disturbed during construction, these items will be carefully removed prior to construction and reset or replaced at the conclusion of construction to the satisfaction of the Island County Engineer or his representative. All signs and traffic control devices must be maintained in operation during construction.

Section Four – Relocation of Facilities

1. Whenever necessary for the construction, repair, improvement, alteration or relocation of all or any portion of said County road right-of-way as determined by the Island County Engineer, any or all of said Facilities shall be removed and relocated within 60 days of notification by the Island County Engineer.

2. Upon failure, neglect or refusal of the Holder to perform any change, removal, relaying or relocating of said Facility or any repairs or reconstruction of said County road right-of-way within sixty (60) days of notification by the Island County Engineer, the County may undertake and perform such requirement and the cost and expense thereof shall be immediately repaid to the County by the Holder.

3. If the Holder fails to relocate water distribution lines within 60 day notification period, the Holder shall be responsible for any project delay claims resulting from their failure to relocate.

4. The work of constructing, removing and relocating any and all of said existing and/or future Facilities shall be done at the expense of the Holder, and with the least possible interference with travel upon the said County road, and to the entire satisfaction and under the supervision of the Island County Engineer and none of such work shall be undertaken or carried on without ten days written notice having been first given to the Island County Engineer.

Section Five – Maintenance and Construction of Facilities

1. Prior to any construction and/or upgrade of the water line, plans and specifications and documentation from the appropriate public health authority confirming the approval of the water system, its proposed construction and/or upgrade must be presented to the Island County Public Works Department.

2. Prior to the beginning of construction, a pre-construction conference shall be held at which the Island County Engineer or his representative and the Holder and Holder's engineer, contractor, and inspector shall be present.

3. The Holder is responsible for properly marking all structures in the County right-of-way owned by the Holder. In compliance with the County's continuing road maintenance activity. Structures shall be cleared, by the Holder, of tall grass,

brush and/or other obstacles (a minimum 5-foot radius required) at all times so County employees in maintenance equipment may easily see said structures. Damage to County equipment due to undisclosed fixtures, non-cleared pedestals, or facilities will be charged to the Holder. Failure by the Holder to comply with the clearing requirements of this paragraph on any occasion with respect to any structure owned by the Holder in the County road right-of-way will eliminate the fiscal responsibility of the County to replace such undisclosed, non-cleared structure damaged due to maintenance on that occasion.

4. Work within the right-of-way shall be restricted to between the hours of 8:00 a.m. and 3:00 p.m., and no work shall be allowed on the right-of-way Saturday, Sunday, or holidays, unless authorized by the Island County Engineer or his representative. Any lane closures must be submitted for approval in advance of use. The hours of permitted closure may differ from the above noted hours.

5. The construction that is authorized through the granting of this franchise shall be commenced within one year from the date hereof; otherwise the franchise shall be null and void and terminated upon notice as provided by law. Time is the essence of this provision.

6. Upon completion of any new construction and/or upgrade to the Facility, a stamped as-built plan and a letter of certification verifying the project was constructed according to plans and specifications must be completed by the responsible party and submitted to the Island County Public Works Department.

Section Six - Indemnification

1. The Holder shall indemnify and save harmless and defend the County, its appointed and elected officers and employees from and against any and all claims, liability, losses, costs (including attorney's fees), and/or causes of action, which may arise from any act or omission of the Holder, its agents, subcontractors, servants or employees in the performance of services under this franchise. The Holder further agrees to indemnify, save harmless and defend the County, its agents, servants, and employees from and against any claim, demand or cause of action, in connection with or incident to the work performed under this franchise, of whatsoever kind or nature arising out of any conduct or misconduct of the Holder, its agents, subcontractors, servants or employees for which the County, its appointed officers, or elected officers, or employees are alleged to be liable. Provided further that if the claims or suits are caused by or result from the concurrent negligence of (a) the Holder, its agents, subcontractors, servants or employees and (b) the County, its appointed or elected officers or employees, this indemnity provision, with respect to claims or suits based upon such negligence, shall be valid and enforceable only to the extent of the Holder's negligence or the negligence of the contractor's agents, subcontractors, servants or employees. This requirement of the Holder to indemnify and defend the County, its appointed and elected officers and employees shall not apply when the damages are caused by or result from the sole negligence of the County, its appointed or elected officers or employees. In the event of litigation between the parties to enforce the rights under this paragraph, reasonable attorney's fees shall be allowed to the prevailing party.

2. The Holder shall maintain liability insurance under the laws of the State of Washington. All insurance required by this franchise to be maintained by the Holder shall specifically include the County as an additional insured and shall not be canceled or reduced below the amounts required by this franchise without thirty (30) days written prior notice to the County.

3. Neither the application by the Holder for any permit or authorization pertaining to the use or occupancy by the Holder of any County road or other County right-of-way or pertaining to the performance on any County road or other County right-of-way of any work by the Holder or by any of its agents, subcontractors, servants or employees, nor the acceptance by the Holder of any such permit or authorization, nor the performance of any activity by the Holder or any of its agents, subcontractors, servants or employees pursuant to any such permit or authorization, nor the acceptance or enjoyment by the Holder of any benefit or privilege arising under any such permit or authorization shall be effective to enlarge or diminish the Holder's obligation or liability to indemnify or hold harmless the County or any of its appointed or elected officers and employees.

Section Seven – Compliance with Federal, State and Local Regulations

1. The granting of this franchise shall place no obligation upon the Island County Engineer and/or the County Commissioners to warrant or defend the rights hereby granted.

2. The franchise Holder must comply with the attached "Accommodations of Utilities on County Road Right-of-Way for Island County" policy that was accepted and approved by the Board of County Commissioners May 15, 1996.

3. The Holder must comply with the Recommended Standards for Water Works (1997 Edition, Great Lakes - Upper Mississippi River Board of State Sanitary Engineers), the Criteria for Sewage Works Design (State of Washington, Department of Ecology, December 1998) and/or other requirements of the Island County Health Department.

4. The Holder, as an owner of an underground utility facility, is required to subscribe to the statewide toll-free telephone one-number locator service, a service through which a person can notify utilities and request field-marking of underground facilities prior to the commencement of excavation, in accordance with the provisions of chapter 19.122 RCW – Underground Utilities.

5. The Holder shall install detector tape or cable approximately 12 inches above the underground facility. The tape shall conform to the standards of the *American Public Works Association Uniform Color Code.*

6. All material and workmanship shall conform to the Washington State Department of Transportation *Standard Specifications for Road, Bridge and Municipal Construction*, current edition, and amendments thereto, and may be subject to inspection by the Island County Engineer or his representative.

7. The Holder of this franchise should remove any asbestos pipe from the County right-of-way. However, it may be abandoned in place subject to the responsibility to remove and dispose of said asbestos pipe at some future date as may be required by the County should future road maintenance constructions or improvement so dictate.

Section Eight – Annexations and Vacations

1. Whenever any of the streets, avenues, alleys, roads, highways, rights-of-way or public places designated in such franchise shall be eliminated from the County jurisdiction by reason of the incorporation or annexation to a city, then all the rights, privileges and franchises so granted shall terminate in respect to the streets, avenues, alleys, roads, highways, rights-of-way, and public places so eliminated.

2. If at any time the County vacates any County street, avenue, alley, road, highway, right-of-way, or other County property which is subject to rights granted by the franchise and the vacation is for the purpose of acquiring the fee or other property interest in the road, right-of-way, or other property interest in the road, right-of-way, or other County property for the use of the County, in either its proprietary or governmental capacity, then the Board of County Commissioners may, at its option, by giving ninety days' written notice to the grantee and after granting an alternate route, terminate this franchise with reference to such County road, right-of-way, or other County property so vacated, and the County shall not be liable for any damages or losses to the grantee by reason of such termination and the grantee shall move its franchise at its own cost.

3. In the event the County vacates any portion of the Franchise Area during the term of this Franchise, and the County does not grant an alternate route under No. 2, above, the County shall, in its vacation procedure, reserve a public utility easement for the Holder's Facilities, unless it is determined by the Board of County Commissioners not to do so for good and/or lawful cause.

Section Nine – Default and Revocation

Any breach of any of the conditions and requirements herein made, or failure on the part of the Holder of this franchise to proceed with due diligence and in good faith after its acceptance, with construction work hereunder, shall subject this franchise to cancellation after a hearing before the County Commissioners, of which said hearing the Holder shall be given at least ten days written notice, if at that time the Holder is a resident and doing business in the State of Washington. Said written notice shall be by certified mail, return receipt requested, if at the time the Holder is a resident or a corporation and doing business in the State of Washington. Otherwise said notice shall be by publishing a notice of said hearing once a week for two consecutive weeks in a newspaper of general circulation in Island County, Washington, the last publication to be at least ten days before the date fixed for said hearing.

Section Ten – Non-exclusive Franchise

This franchise is non-exclusive and the County reserves the right to grant franchises to other persons or companies to use the County road right-of-ways or any part thereof covered by this franchise for the same purposes authorized by law.

Section Eleven – Franchise Term

This franchise is and shall remain in full force and effect for a period of twenty-five (25) years and after the effective date of the executed Franchise; provided, however, the Holder shall have no rights under this Franchise nor shall the Holder be bound by the terms and conditions of the Franchise unless the Holder shall, within twenty (20) days after the effective date of the Franchise, file with the County its written acceptance of the Franchise.

Section Twelve - Assignment

1. No assignment or transfer of this franchise in any manner whatsoever shall be valid nor vest any rights hereby granted until the Island County Engineer shall have been furnished with written evidence of such transfer or certified copies thereof, together with written acceptance of the terms of the franchise by the Assignee, and unless and until the County Commissioners shall have granted their

consent in writing to such assignment or transfer. Failure to comply with this provision shall be cause for cancellation as herein provided.

2. The Holder shall, within twenty (20) days from receipt of a copy of this order, file with the Island County Engineer at Coupeville its written acceptance of the terms and conditions of this franchise.

Section Thirteen - Subletting

The Holder shall not sublet use of its Facilities within the Franchise Area without the prior written consent of the County. Such consent shall not be unreasonably withheld. Prior to the date of any sublet, the sublettee shall file written notice with the County of the proposed sublet and shall apply for all applicable permits and franchises together with its written acceptance of all terms and conditions of this Franchise. The sublettee may not use the Facilities until all approvals, permits, and franchises are granted and in effect.

Section Fourteen – Severability

If any term, provision, condition or portion of this Franchise shall be held to be invalid, such invalidity shall not affect the validity of the remaining portions of this Franchise, which shall continue in full force and effect. The headings of sections and paragraphs of this Franchise are for convenience of reference only and are not intended to restrict, affect or be of any weight in the interpretation or construction of the provisions of such sections or paragraphs.

Section Fifteen – Modification and Amendment

1. This Franchise may be amended only by written instrument, signed by both parties, which specifically states that it is an amendment to this Franchise and is approved and executed in accordance with the laws of Washington State.

2. If, during the term of this Franchise, there becomes effective any change in federal or state law including changes approved by the Washington Utilities Transportation Commission which:

   a. affords either party the opportunity to negotiate in good faith a term or condition of this Franchise which term or condition would not have, prior to such change, been consistent with federal or state law; or

   b. pre-empts or otherwise renders null and void any term or condition on this Franchise which has theretofore been negotiated in good faith;

then, in such event, either party may, within one hundred and eighty (180) days of the effective date of such change, notify the other party in writing that such party desires to commence negotiations to amend this Franchise. Such negotiations shall encompass only the specific term or condition affected by such change in federal or state law and neither party shall be obligated to re-open negotiations on any other term or condition of this Franchise. Within thirty (30) days from and after the other party's receipt of such written notice, the parties shall, at a mutually agreeable time and place, commence such negotiations. Pending completion of such negotiations resulting in mutually agreeable amendment of this Franchise, adoption of such amendment by the Board of County Commissioners and accepted by the Holder, and except as to any portion thereof which has been pre-empted or otherwise rendered null and void by such change in federal or state law, the Franchise shall remain in full force and effect.

Section Sixteen – Miscellaneous

1. The Holder will be subject to any future charge as may be authorized by the Board of County Commissioners through a public process for ordinance adoption that may be required of the franchise holders for their use of County right-of-way.

2. This franchise is granted under the provisions and subject to the conditions and requirements of Chapter 36.55 RCW Franchises on Roads and Bridges as now in effect or as hereinafter amended.

DATED at Coupeville, Washington this 2 day of OCTOBER, 2006.

CHAIRMAN, Board of County Commissioners

ATTEST: Elaine Marlow
ELAINE MARLOW
Clerk of the Board

BOARD OF CO. COMMISSIONERS EST ISLAND COUNTY 1853 WASHINGTON

Appendix J

Easements

Note:

Only the easement needed for Well No. 1-08) is included.
For other easements refer to the 2003 to 2008 *Water System Plan* and previous water system plans.

06/29/2007 10:11:43 AM 4205776
Recording Fee $0.00 Page 1 of 11
Easement
Island County Washington

EXCISE TAX EXEMPT

JUN 29 2007

LINDA E. RIFFE
ISLAND COUNTY TREASURER

After recording return to:
Island County Public Works
PO Box 5000
Coupeville, WA 98239

WELL SYSTEM EASEMENT AGREEMENT

County: Island County, a political subdivision of the State of Washington
Town: Town of Coupeville, a Washington municipal corporation
Legal Description: Easements lying within the Northeast One-quarter of the Northeast One-quarter of Section 11, Township 31 North, Range 1 East of the Willamette Meridian, as described in Exhibit B.
Assessor's Tax Parcel Number: R13111-432-4450

WHEREAS, pursuant to RCW 90.44.400 Island County, hereinafter referred to as the "County," was designated by the Washington State Department of Ecology as a Ground Water Management Area with the purpose of protecting ground water quality, assuring ground water quantity, and providing for the efficient management of water resources to meet the current and future needs of the County;

WHEREAS, pursuant to the Public Water System Coordination Act (RCW 70.116) the COUNTY was designated as a Critical Water Supply Service Area by the Washington State Department of Health;

WHEREAS, pursuant to RCW 70.116 a Coordinated Water System Plan (CWSP) was prepared and adopted by the County;

WHEREAS, the CWSP promotes the development of regional public water systems consistent with the protection and enhancement of the public health and well-being and in a manner that is consistent with adopted County land use plans, ordinances, and/or growth policies addressing development;

WHEREAS, the Town of Coupeville, hereinafter referred to as the "Town," owns and maintains a municipal water system including water wells, water reservoirs, water distribution mains, fire hydrants, etc., and provides water service within the Service Area approved by the County;

WHEREAS, County is the legal owner of the real property more particularly described in Exhibit "A" attached hereto, which is located in Island County, Washington and known as Island County Tax Parcel No. R13111-432-4450, hereinafter sometimes referred to as the "County's Property;"

WHEREAS, the Town public water system provides public water service to the owners of real property located in the Town of Coupeville and of other properties in the vicinity of the Town of Coupeville, hereinafter "the Town Water System;" and

WHEREAS, the County and the Town have reached an understanding whereby the County will grant and convey to the Town, pursuant to the terms and conditions as set forth below, certain easements for the installation and operation of wells to be located on the County Property, as described in Exhibit "B;"

NOW, THEREFORE, in consideration of the terms, conditions, covenants and performances contained herein or attached and incorporated and made a part hereof, the County and Town enter into this AGREEMENT for the beneficial use of the County's property and the Town's wells and operation and maintenance services for the shared supply and associated infrastructure.

1. The County agrees to the following:
   a. To allow the Town to draw and use the water from the two wells described herein and to grant and convey to the Town the following exclusive and perpetual easement for water wells, well-house sites, well houses, above-ground and underground equipment and utilities, together with access, ingress, egress and other necessary privileges to be used and enjoyed in connection with the installation of the wells and related equipment to be utilized by the Town and the Town Water System, as described in Exhibit "B" as "Legal Descriptions for Sanitary Control Easements around Two Water Wells" and illustrated in Exhibit "C."
   b. To order title insurance for the easements, for which the Town will reimburse the County, upon invoice, the full cost of the title insurance.
   c. To grant and convey to the Town the following exclusive and perpetual easements for underground utilities, ingress, egress, access and other necessary privileges to be used and enjoyed in connection with the installation and use of the wells and water system equipment, as described in Exhibit "B" as "Legal Descriptions for Access Easement for Two Water Wells" and illustrated in Exhibit "C."
   d. To entitle the Town to improve the easement areas as the Town deems necessary for the purposes described herein. All wells, well equipment and related property installed in the easement areas shall be owned by the Town. The County agrees not to place any physical obstructions within the easement areas that may interfere with the exercise of Town's rights herein.
   e. To record well protection covenants in the standard form as specified by Island County Health Department to establish sanitary control and pollution protection

for the 100-foot radii around the wells and water system to be located on said property, as described in Exhibit "D."

f. The easements shall constitute a covenant that runs with the land now owned by the County, as described in Exhibit "A."

g. To cooperate with the Washington State Departments of Ecology, hereinafter referred to as "DOE," and Health, hereinafter referred to as "DOH," in support of the Town's efforts in obtaining a water right for the withdrawal of water at this site. The maximum amount of water withdrawal shall be controlled by the DOE and DOH.

2. The Town agrees to the following:

a. To assume full responsibility for design, approval, construction and installation of improvements in the easement areas.

b. To bear and promptly pay all costs and expenses of installation, construction and maintenance of any improvements constructed within the easement areas and all other costs and expenses related to the rights and privileges granted under this AGREEMENT.

c. To operate and maintain the withdrawal, storage and supply system in accordance with the regulations established for a public water supply system.

d. To obtain all necessary permits and approvals for withdrawal of water at subject property.

e. To neither permit nor suffer any lien to be filed against the County's Property in connection with the construction of improvements or other activities authorized by this AGREEMENT. If any such lien is filed against the County's Property, the Town shall indemnify and hold the County harmless for any and all liability arising out of the lien and shall cause the same to be discharged of record promptly.

f. Should it become necessary to add a second point of withdrawal to utilize the water rights granted to the Town Water System, to bear the cost to construct all necessary improvements, and obtain all permits and DOH approval for the second or subsequent points of withdrawal.

g. To plan for and reserve water withdrawn from the well to meet the potential potable water needs adjacent to the closed Town's and County's solid waste disposal facilities.

h. To minimize interference with the use and enjoyment of the remaining portion of the County's Property.

i. Should the Town Water System be discontinued as a point of withdrawal, to bear the cost of abandoning the well according to DOE guidelines, or maintaining the well as a monitoring point for static water level.

j. To indemnify, defend and hold Island County, its appointed and elected officers and employees, harmless from all claims arising from or in connection with (i) the use of the wells; (ii) any act, omission or negligence of the Town or any of the Town's officers, agents, employees, invitees or contractors of the Town or of the Town's licensees; and (iii) any accident, injury or damage whatsoever occurring in or at the County Property.

3. Considerations: The Town shall pay to the County Fifty Thousand Dollars ($50,000.00), payable no later than thirty (30) days after the execution of this AGREEMENT.

4. The Town, for itself, its heirs, executors, administrators, successors and assigns, jointly and severally, does hereby release the County, its officials, agents, employees, and contractors and does hereby remise and relinquish to them all actions or cause of actions, claims, demands, liabilities, loss, damage or expense of whatsoever kind or nature, including attorney's fees, which the Town shall at any time sustain or incur by reason or in consequence of any work done or which should be done pertaining to the Town operation and use of the Town Water System.

5. It is mutually understood and agreed by the parties hereto that the Town, its agents, employees, and contractors are in no sense agents or employees of Island County, shall not represent themselves as such, and have no authority to bind Island County to any agreement or act as agents of Island County in any way.

6. It is agreed that any amendment, modifications, or changes to this AGREEMENT must be in writing.

7. Should any term or condition hereof be deemed void or unenforceable, the remaining provisions of this AGREEMENT shall remain in full force and effect.

8. This AGREEMENT embodies the entire understanding of the parties, and there are no further or other agreements or understandings, either written or oral, in effect between the parties relating to the subject matter hereof unless expressly referred to in this AGREEMENT.

9. This AGREEMENT and covenants shall take effect upon its execution by both the TOWN OF COUPEVILLE and the BOARD OF COUNTY COMMISSIONERS of Island County, Washington.

06/29/2007 10:11:43 AM
Recording Fee $0.00 Page 5 of 11
Easement
Island County Washington

4205776

Executed by the Board of County Commissioners this 4 day of June, 2007.

BOARD OF ISLAND COUNTY COMMISSIONERS
ISLAND COUNTY, WASHINGTON

Mike Shelton, Chairman

Wm. L. McDowell, Member

John Dean, Member

Attest: Elaine Marlow
Elaine Marlow, Clerk of the Board

STATE OF WASHINGTON)
) ss. Acknowledgment
COUNTY OF ISLAND)

On this 4th day of JUNE, 2007 before me, the undersigned, a Notary Public in and for the State of Washington, duly commissioned and sworn, personally appeared Mike Shelton, Wm. L. McDowell and John Dean, to me known to be the members of the Board of Island County Commissioners, Island County, Washington, the political subdivision of the State of Washington that executed the foregoing instrument, and acknowledged the said instrument to be the free and voluntary act and deed of said political subdivision, for the uses and purposes herein mentioned, and on oath stated that they were authorized to execute the said instrument on behalf of said political subdivision.

IN WHITNESS WHEREOF, I have hereunto set my hand and affixed my official seal the day and year first above written.

Notary Public
State of Washington
SHIRLEY Y. WOOD
My Appointment Expires Dec 12, 2009

Shirley Y Wood
Print Name: SHIRLEY Y WOOD
Notary Public for the State of Washington,
Residing at: Clinton WA
My Commission expires: 12-12-2009

06/29/2007 10:11:43 AM
Recording Fee $0.00 Page 6 of 11
Easement
Island County Washington

4205776

Executed by the Town of Coupeville this 30th day of May, 2007.

By: Nancy Conard
Nancy Conard, Mayor

Attest:

Judy A. Thomas
Judy A. Thomas, Town Clerk Treasurer

06/29/2007 10:11:43 AM
Recording Fee $0.00 Page 7 of 11
Easement
Island County Washington

EXHIBIT "A"

The Northeast Quarter of the Northeast Quarter of Section 11, Township 31 North, Range 1 East of the Willamette Meridian;

EXCEPT that portion of the Northeast Quarter of the Northeast Quarter ofSection 11, Township 31 North, Range 1 East of the Willamette Meridian, described as follows:

Beginning at the Northeast corner of said Northeast Quarter of the Northeast Quarter of Section 11;
thence South 01°36'04" West along the East line thereof, a distance of 780.07 feet;
thence North 88°00'37" West 736.29 feet;
thence North 01°36'04" East 776.26 feet to the North line of aforesaid Northeast Quarter of the Northeast Quarter of Section 11;
thence South 88°18'24" East along said North line, a distance of 736.28 feet to the point of beginning;

ALSO EXCEPT County Road along the East 20.00 feet thereof, known as Keystone Road.

Situated in Island County, Washington.

- END OF EXHIBIT "A" -

06/29/2007 10:11:43 AM 4205776
Recording Fee $0.00 Page 8 of 11
Easement
Island County Washington

Exhibit "B"

Legal Descriptions for Access Easement for Two Water Wells

This Easement lies within the Northeast One-Quarter of the Northeast One-Quarter of Section 11, Township 31 North, Range 1 East of the Willamette Meridian, more particularly described as follows:

BEGINNING at the Southeast Corner of said Northeast One-Quarter of the Northeast One-Quarter; thence Northerly along the East line of said One-Quarter, One-Quarter for a distance of 90.00 feet; thence Westerly parallel with the South line of said One-Quarter, One-Quarter to an intersection with the West Right-of-Way Line of the Keystone Hill Road; said point being the TRUE POINT OF BEGINNING of this Access Legal Description: Thence continuing Westerly parallel with said South line of said One-Quarter, One-Quarter for a distance of 130.00 feet; thence Northerly parallel with said West Right-of-Way Line of the Keystone Hill Road for a distance of 60.00 feet; thence Easterly parallel with the South line of said One-Quarter, One-Quarter for a distance of 40.00 feet; thence Southerly parallel with said West Right-of-Way Line of Keystone Hill Road for a distance of 45.00 feet; thence Easterly parallel with the South line of said One-Quarter, One-Quarter for a distance of 90.00 feet to an intersection with said West Right-of-Way line of the Keystone Hill Road; thence Southerly along said West Right-of-Way line for a distance of 15.00 feet to the TRUE POINT OF BEGINNING.

Situate in Island County, Washington.

Legal Descriptions for Sanitary Control Easements around Two Water Wells

Easements within the Northeast One-Quarter of the Northeast One-Quarter of Section 11, Township 31 North, Range 1 East of the Willamette Meridian, described as follows:

BEGINNING at the Southeast Corner of said Northeast One-Quarter of the Northeast One-Quarter; thence Westerly along the Southerly line of said One-Quarter of the One-Quarter to a point 110.00 feet Westerly of the West Right-of Way Line of Keystone Hill Road; thence Northerly parallel with said West Right-of-Way Line for a distance of 110.00 feet to Point "A", said point being the center point of a proposed water well having a 100.00 foot Radius Circular Sanitary Control Easement.

Situate in Island County, Washington

Easements within the Northeast One-Quarter of the Northeast One-Quarter of Section 11, Township 31 North, Range 1 East of the Willamette Meridian, described as follows:

BEGINNING at the Southeast Corner of said Northeast One-Quarter of the Northeast One-Quarter; thence Westerly along the Southerly line of said One-Quarter of the One-Quarter to a point 110.00 feet Westerly of the West Right-of Way Line of Keystone Hill Road; thence Northerly parallel with said West Right-of-Way Line for a distance of 145.00 feet to Point "B", said point being the center point of a proposed water well having a 100.00 foot Radius Circular Sanitary Control Easement.

Situate in Island County, Washington

06/29/2007 10:11:43 AM
Recording Fee $0.00 Page 9 of 11
Easement
Island County Washington
4205776

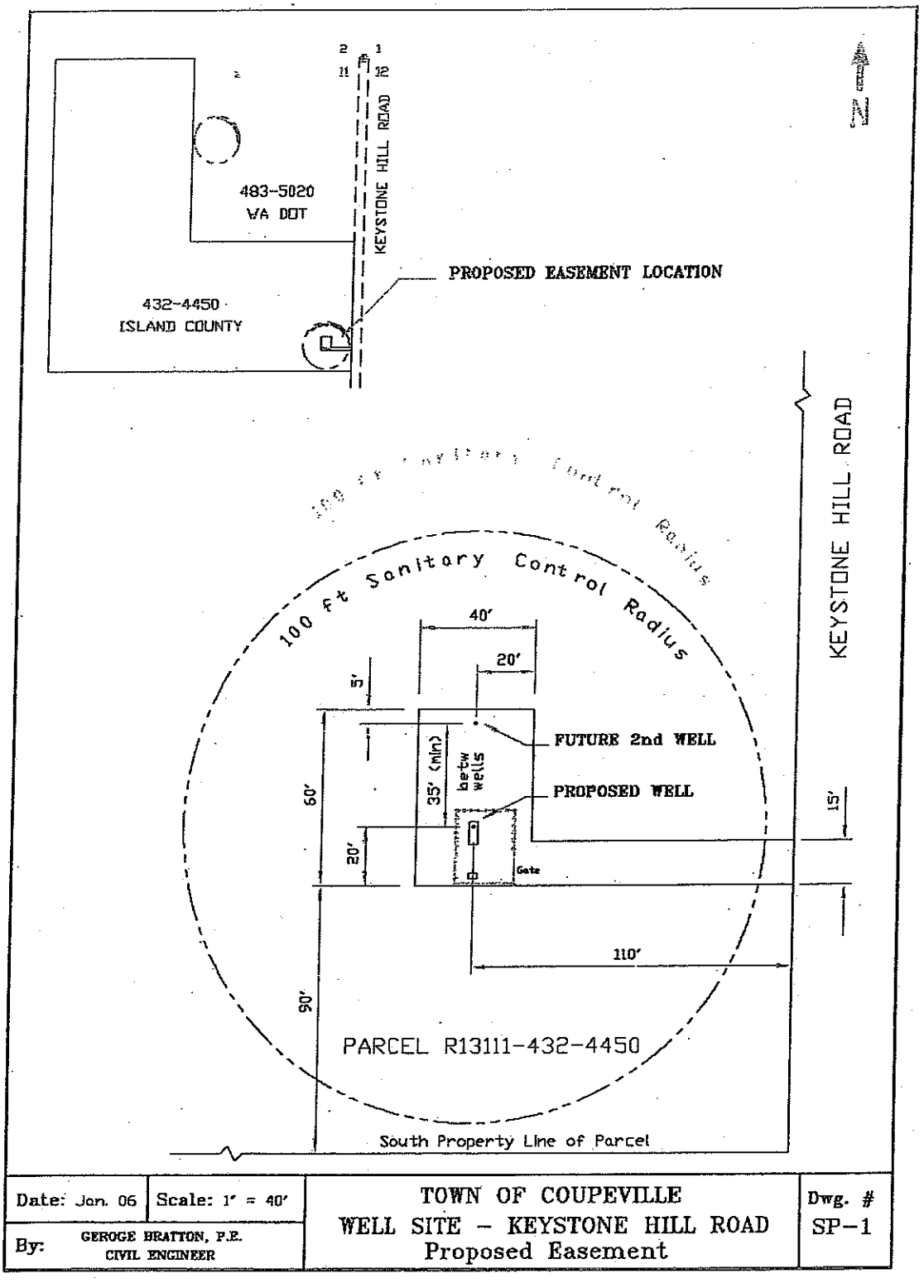

Date: Jan. 06	Scale: 1" = 40'	TOWN OF COUPEVILLE WELL SITE – KEYSTONE HILL ROAD Proposed Easement	Dwg. # SP-1
By: GEROGE BRATTON, P.E. CIVIL ENGINEER			

Return to:
Island County Public Works
PO Box 5000
Coupeville, WA 98239

06/29/2007 10:11:43 AM 4205776
Recording Fee $0.00 Page 10 of 11
Easement
Island County Washington

Exhibit "D"

DECLARATION OF COVENANT

Know all men by these presents that I (we) the undersigned, owner(s) in fee simple of the land described herein, hereby declare this covenant and place same on record.

I (we), the grantor(s) herein, Island County is the owner in fee simple of the following described real estate situated in Island County, State of Washington, to wit: Island County Parcel Number R11311-432-4450, legal description on Attachment A, on which the Town of Coupeville owns and operates a well and waterworks supplying water for public use located on said real estate, to wit: the Town of Coupeville is required to keep the water supplied from said well free from impurities which might be injurious to the public health.

It is the purpose of these grants and covenants to prevent certain practices hereinafter enumerated in the use of said grantor(s) land which might contaminate said water supply.

NOW, THEREFORE, the grantor(s) agree(s) and covenant(s) that said grantor(s), his (her) (their) heirs, successors and assigns will not construct, maintain, or suffer to be constructed or maintained upon the said land of the grantor(s) and within 100 (one hundred) feet of the well herein described, so long as the same is operated to furnish water for public consumption, any of the following: structures, residences, cesspools, sewers, privies, septic tanks, drainfields, manure piles, garbage of any kind or description, barns, chicken houses, rabbit hutches, pigpens, or other enclosures or structures for the keeping or maintenance of fowls or animals, or storage of liquid or dry chemicals, herbicides, or insecticides.

These covenants shall run with the land and shall be binding on all parties having or acquiring any right, title, or interest in the land described herein or any part thereof, and shall inure to the benefit of each owner thereof.

WITNESS _____ hand_____ this_____day of _____, 2007

_____(Seal)

_____(Seal)

Grantor(s)

State of Washington
County of_____) ss

I, the undersigned, a Notary Public in and for the above named County and State, do hereby certify that on this _____ day of_____, 20_____, personally appeared before me _____ to me known to be the individual _____ described in and who executed the within instrument, and acknowledge that he (they) signed and sealed the same as _____ free and voluntary act and deed, for the uses and purposes therein mentioned.

GIVEN under my hand and official seal the day and year last above written.

(SIGNATURE)_____

(NAME - PRINTED)_____

Notary Public in and for the
State of Washington residing at _____
My Commission Expires: _____

Appendix K

Island County Service Area Agreement

BEFORE THE BOARD OF COUNTY COMMISSIONERS
OF ISLAND COUNTY, WASHINGTON

IN THE MATTER OF AMENDING THE SERVICE AREA FOR THE TOWN OF COUPEVILLE WATER SYSTEM AND INCORPORATING IT INTO THE ISLAND COUNTY COORDINATED WATER SYSTEM PLAN.	)	RESOLUTION C-62-06 PLG-013-06

WHEREAS, the Town of Coupeville submitted application WSR 149/06 on April 13, 2006 requesting that the Town's water system service area be expanded; and

WHEREAS, WSR 149/06 includes water demand estimates that are consistent with county population projections and current comprehensive land use designations; and

WHEREAS, there are a number of existing water systems located within the boundary of the future service area; and

WHEREAS, existing water systems located within the Town of Coupeville's future service area may not be expanded without also modifying the Town's future service area; and

WHEREAS, pursuant to WAC 197-11-800(4)(b) appropriations of 2,250 gallons per minute or less of ground water are exempt from SEPA review; and

WHEREAS, the aggregated of all wells that serve the Town of Coupeville is less than 2,250 gallons per minute, **NOW, THEREFORE,**

BE IT RESOLVED by the Board of Island County Commissioners that the service area of the Town of Coupeville is amended as shown in Exhibit A and is hereby incorporated into the Island County Coordinated Water System Plan.

PLG-013-06, C-62-06

APPROVED AND ADOPTED this 5 day of JUNE, 2006.

BOARD OF COUNTY COMMISSIONERS OF
ISLAND COUNTY, WASHINGTON

Wm. L. McDowell, Chairman

William J. Byrd, Member

Mike Shelton, Member

ATTEST:

Elaine Marlow
Clerk of the Board

PLG-013-06, C- 62-06

EXHIBIT A

PLG-013-06

C-62-06

RECEIVED
APR 13 2006
ISLAND COUNTY
COMMUNITY DEVELOPMENT

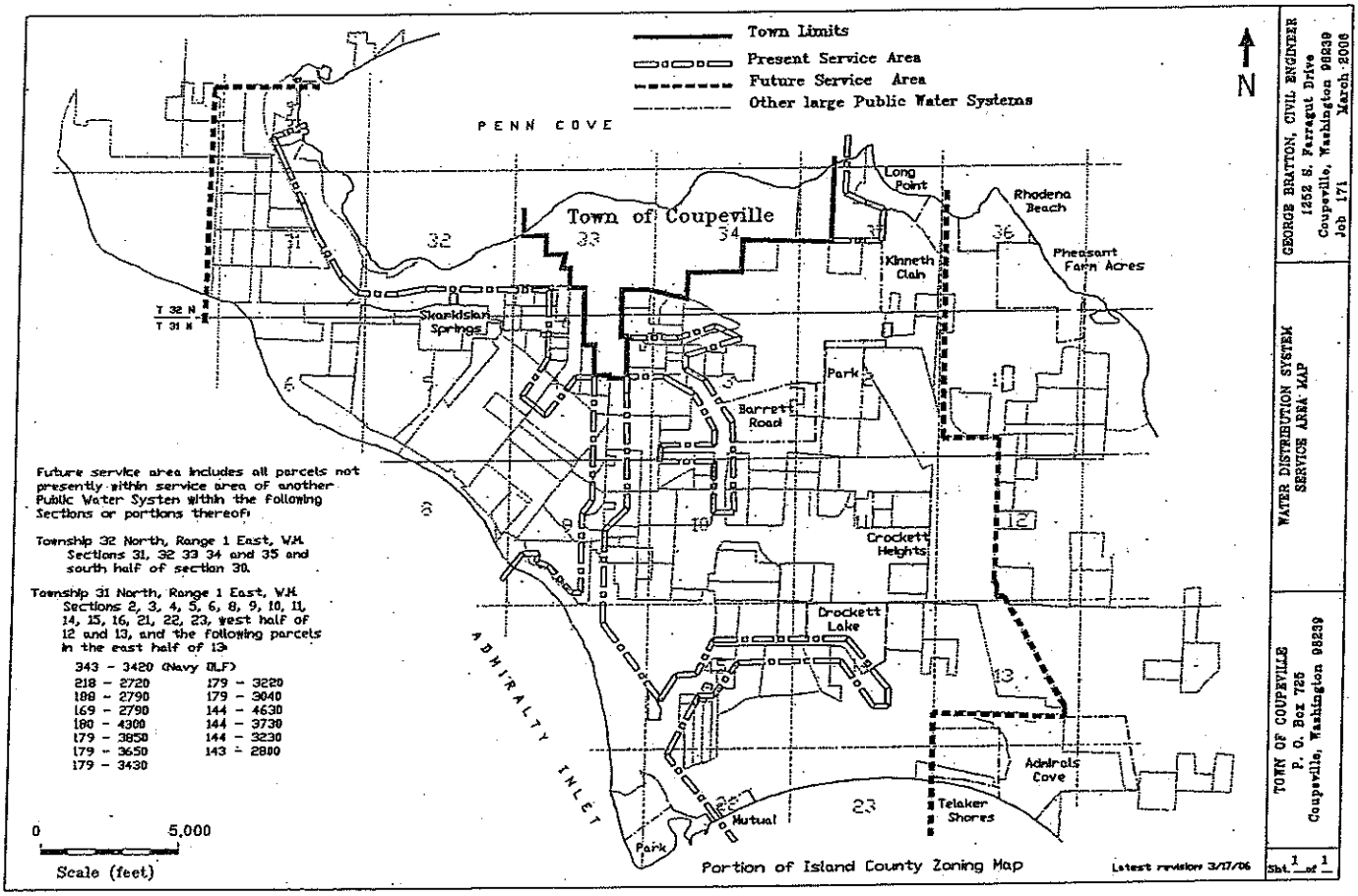

PLG-013-06
C-62-06

Appendix L

Standard Plans and Specifications

STANDARD SPECIFICATION FOR WATER MAIN INSTALLATION

1. General:

These specifications cover the minimum standards for the installation of 2 to 12-inch diameter water mains complete with valve, fittings, fire hydrants, appurtenances, etc. These specifications include minimum material specifications for bedding and backfill, pipe valves, fire hydrants and other associated items.

These specifications shall be used in conjunction with the contract documents provided by the Town, and with the other portions of the Project Report (if issued) containing these specifications. These specifications and accompanying drawings were prepared assuming the work would be done by Town staff, or under the inspection of a contractor by the Town's Public Works Director having knowledge of the existing plant and equipment, and underground utilities.

Where American Water Works Association Standards (AWWA), American Society for Testing Materials Standards (ASTM), Washington State Department of Transportation Standard Specifications for Road, Bridges and Municipal Construction, 1991 (DOT Std. Specifications) or other standards are referenced within, any further statement of requirements is for the purpose of either highlighting important details of the Standards or to impose more stringent requirements. Where references to these standards are made hereinafter, the latest published edition of the standards shall be assumed unless otherwise stated.

No substitution for the material specified herein or in the engineering drawings shall be made without prior approval of the Town. No change of the water main alignment, water main diameter, etc. shown on the engineering drawings may be made without the prior approval of the Town.

Where a manufacturer's product is specified by name and model, the intent is to

a) Establish a minimum standard where either a AWWA Standard is not available, or where the standard of performance exceeding AWWA Standards is desired,

b) Conform to existing products in the distribution system or to provide inventory uniformity for the purpose of maintenance.

The approval of alternate materials to those specified by manufacturer's name and model, as a "approved equal" shall be at the sole discretion of the Town.

Within these specifications, "Engineer's approval" shall be issued by the Town's Public Works Director.

The "Engineer's Inspection" may be delegated to the Town's Public Works Director.

2. Materials:

Water Mains - Unless otherwise specified in the drawings, all water mains 4, 6 and 8-inch diameter shall be either ductile iron pipe (DI) or polyvinyl chloride (PVC) pressure pipe conforming to the following specifications. All "yard" piping at the reservoir site, or into or under a building or other structural foundation, shall be ductile iron.

All ductile iron pipe shall be class 50 single cement lined, with "Tyton" or mechanical joints, conforming to the following AWWA Standards:

- C104 "Cement Mortar-Lining for Ductile-Iron Pipe and Fittings for Water"
- C111 "Rubber-Gasket Joints for Ductile-Iron and Grey-Iron Pressure Pipe and Fittings"
- C151 "Ductile-Iron Pipe Centrifugally Cast in Metal Molds or Sand Lined Molds, for Water and Other Liquids"

Ductile iron pipe with screwed flanges, welded restraining rings, or EBAA IRON or similar restraining glands and/or flange adapters shall be minimum thickness class 53, except that EBAA IRON "MEGALUG" and "MEGAFLANGE" restraint may be used on class 50 ductile iron.

Unless otherwise approved by the Town, polyethylene encasement shall be installed on all ductile iron pipe, valves and fittings and shall conform to the latest version of the following AWWA Standard:

- C105 "Polyethylene Encasement for Ductile-Iron Piping for Water and Other Liquids"

All polyvinyl chloride (PVC) pressure pipe shall be pressure class 150 conforming to AWWA Standard:

- C900 "Polyvinyl Chloride (PVC) Pressure Pipe, 4-Inch Through 12-Inch for Water"

All 2-inch through and including 3-inch mains (e.g., supply pipe from well), shall be polyvinyl chloride (PVC) pressure pipe, class 200, rubber-ring joint, Pacific Western Extruded Plastics Co. (P W Pipe), "Twin Seal" or Engineer approved equal.

Fittings - All fitting 4-inch and larger shall be single cement lined ductile iron or grey iron conforming to the following AWWA Standards:

- C104 "Cement Mortar-Lining for Ductile-Iron Pipe and Fittings for Water"
- C110 "Ductile-Iron and Grey-Iron Fittings, 3-Inch Through 48-Inch, for Water and Other Liquids"
- C111 "Rubber-Gasket Joints for Ductile-Iron and Grey-Iron Pressure Pipe and Fittings"
- C153 "Compact Fittings for Water Service"

Valves - All valves 4 through 12-inch in diameter shall conform to the following AWWA Standards:

- C509 "Resilient-Seated Gate Valves for Water and Sewerage Systems"
- C111 "Rubber-Gasket Joints for Ductile-Iron and Grey-Iron Pressure Pipe and Fittings"

Fire Hydrants - All fire hydrants shall be dry barrel, compression type conforming to AWWA Standard C502 "Dry-Barrel Fire Hydrants", with 4.5" pumper port and two 2.5" outlets, 6" inlet, and 1 3/16" pentagon operating nut. . A Storz adaptor shall be provided on the pumper port only if required by the Town and requested by the local fire department.

Service Pipe - All 3/4 to 2-inch water service pipes shall be pressure class 200 psi, iron pipe size polyethylene, PE 3406 resin, conforming to the following AWWA Standard:

- C901 "Polyethylene (PE) Pressure Pipe and Tubing, 1/2-Inch Through 3-Inch. for Water Service"

All water services larger than 2-inch shall conform to the standards for water mains in Section 2.1 above.

Brass Fittings - All miscellaneous fittings shall be brass conforming to the following AWWA Standard:

- C800-89 "Underground Service Line Valves and Fittings"

No steel or galvanized fittings shall be used.

Fittings shall be of the compression type as manufactured by Mueller, Decatur, Illinois, series 110 Compression Connections; or by Ford Meter Box Co., Wabash, Indiana, Pack Joint Coupling series. The coupling shall be supplied with stainless steel tube liner where required by the manufacturer, and shall be compatible with polyethylene service pipe thickness and diameter (see par. 2.5, above).

Curb stops, where used for blow offs, air valves, etc., shall be o-ring type as manufactured by Mueller, Decatur, Illinois, series Mark II Oriseal c/w tee head, or Engineer approved equal.

Branch connections, where used on a dual service line (two customers supplied from one service connection) shall be 1 x 3/4 x 3/4 inch "Y" style c/w compression fittings (specified as above) as manufactured by Mueller, Decatur, Illinois, series Mark II Oriseal c/w tee head, or Engineer approved equal.

Meter setters shall incorporate compression inlet and outlet fittings, upstream angle ball valve as manufactured by Ford Meter Box Co., Wabash, Indiana, or Engineer approved equal, and outlet fitting with an angle pattern residential dual check valve backflow preventer, complying with ASSE Standard 1024, as manufactured by Watts Regulators Co., Lawrence, MA, Series 7A or Engineer approved equal.

Valve Boxes - All valve boxes shall be cast iron slip type with bottom flange and "WATER" cover as manufactured by VanRich Casting Corp., Portland, OR, Model 920 Standard or Engineer approved equal.

Backflow Prevention Assemblies - Backflow prevention assemblies shall be State Department of Health approved, and University of Southern California Foundation for Cross Connection Control and Hydraulic Research (USC FCCCHR) approved.

State and USC FCCCHR approval is not required where residential dual check valve backflow preventers are installed with water meters as a voluntary means (i.e., where backflow prevention is not a requirement) of providing premise isolation.

Marking Tape - Marking tape for PVC mains and polyethylene services shall be of the detectable type (with metallic foil laminate) with plastic jacket, 6-inch wide, blue color with wording "WATER LINE", as manufactured by Calpico, San Francisco, CA, or Engineer approved equal.

Tracer Wire – Where required by the Town for PVC mains and polyethylene services, in addition to the marking tape, a 12-gage stranded wire with THHN or THWN insulation shall be taped to all polyethylene services every 5 feet with 2 inch X 10 mil poly tape. Splices are allowed only at pipe branches, and must be of an approved underground type. The detector wire shall terminate at the top or each valve or meter box. Detector wire shall be strapped to the pvc main every 5 feet with 2" wide by 10 mil thickness poly tape.

Air Release Valves - Unless otherwise specified in the Drawings, all air valves shall be 3/4-inch simple lever air release type, as manufactured by Valve-Matic, Elmhurst, Illinois, Model 22, or Engineer approved equal. . Air release/vacuum valves will conform to the latest version of the following AWWA specification:

C512 "Air release, Air/Vacuum and Combination Air Valves"

Meter Boxes - Unless otherwise specified in the Drawings, water meter boxes shall be plastic body and cover, as manufactured by Ametek, Sheboygan, Wisconsin, series 17014 and 190109 (corresponding to meter size) or Engineer approved equal. The meter box shall be of adequate size to accommodate both the meter and meter setter, also the dual check valve backflow preventer.

Water Meters - Water meters to single family residential customers shall be 3/4 x 3/4 inch displacement type, SENSUS SR II, with registration in gallons, as manufactured by Sensus Technologies, Uniontown, PA meeting AWWA Standard C700, or Town approved equal.

Service Saddles - Service saddles shall be furnished with a ductile iron body and IPS standard tapping, with a neoprene or Buna-N rubber gasket cemented in place. Saddles shall be double strap for PVC pipe (saddles required for all service sizes), as manufactured by Mueller, Decatur, Illinois, or Engineer approved equal. Services may be direct tapped into ductile iron pipe.

Control Cable - With the new water mains, should the Town elect to install new control cable to a reservoirs or well site, the cable shall be 8 wire #14 Type PTN direct burial control cable, laid continuously, without buried splices. All control cable shall be installed in 2-inch electrical conduit with pull boxes spaced not greater than 1,000 feet.

Valve Marker Post – Where required by the Town and/or shown on the installation drawings, valve marker posts shall be 42-inch high reinforced concrete as manufactured by Fog Tite or Town approved equal.

Hydrant Guard Posts - Where required by the Town and/or shown on the installation drawings, hydrant guard posts shall be 72-inch high, 9-inch diameter reinforced concrete as manufactured by Fog Tite or Town approved equal.

Water Sample Stations – Water sample stations shall be "Eclipse No. 88" as manufactured by Kupferle Foundry Company, St. Louis, Missouri.

Blow-offs Assemblies - Where required by the Town and/or shown on the installation drawings, blow-offs shall be "Eclipse No. 85-B" Blow-Off Hydrants as manufactured by Kupferle Foundry Company, St. Louis, Missouri.

3. Installation:

General - Unless otherwise specified in the Drawings or in these specifications, water mains shall be installed in accordance with the manufacturer's printed specifications, to AWWA Standards and with *1994 Standard Specifications for Road, Bridge and Municipal Construction,* prepared by the WA DOT, or the latest edition thereof. References to *"Section", "Paragraphs",* or *"Divisions"* indicated by number hereinafter pertain to these DOT *Standard Specifications.*

Trenching/Backfill - Trenching, foundation, bedding and backfilling for water mains and incidental piping shall conform to DOT Std. Specif. *Section 7-10*, except that backfill for flexible pipe ("initial backfill" in the detail) shall be extended 12 inches over the crown of the pipe.

The requirements for bedding and backfill for ductile iron and PVC pipe are summarized in the Drawings, attached hereto.

Unless otherwise specifically approved by the Engineer, only imported material conforming to *Section 9-03.16* shall be used for bedding (layer under the pipe), haunching (layer to spring line) and initial backfill.

Native material may be approved by the Engineer if it fully complies with DOT Std. Specif. *Section 9-03.15* and *Section 9-03.16*. PVC pipe shall be considered "Flexible pipe" with respect to this section. Where a request for use of native material is made by the Contractor, the material shall be evaluated prior to use by a qualified material testing lab and certified that it meets the requirements of the above referenced DOT Sections. The Engineer may require periodic testing to ensure continuing material conformance. The cost of all such testing shall be borne by the Contractor.

In County right of way, where water mains or services are laid under pavement or in the road shoulder backfill above the initial backfill shall conform to *Section 7-10.3(11)* and *Section 9-03.19*. In other areas native material may be used above the initial backfill. In ditches, the backfill shall comply with any additional requirements imposed by County, such as the use of quarry stone for erosion control.

Unless otherwise specified in the Drawings all water main excavations shall be made by open cut. All trenches shall be excavated to true and smooth bottom grades in accordance with the lines given in the Drawings. The trench bottom shall provide uniform bearing and support for each length of pipe.

Bell holes shall be excavated to the extent necessary to permit accurate work in making and inspecting the joints. The banks of the trenches shall be kept as nearly vertical as soil conditions will permit, and where required to control trench width or to protect adjacent structures, the trench shall be sheeted and braced.

Care shall be taken not to excavate below the depth specified, unless to remove unsuitable materials. Excavation below the grade of the pipe shall be backfilled with select backfill material and compacted as specified herein.

Pipe Laying - Except as noted below, water mains and services shall be laid in accordance with the procedures outlined in DOT Std. Specif. *Section 7-11*.

Water mains shall be laid to provide minimum cover of three feet. The depth of the water main may be increased as necessary to pass under other utilities, culverts, etc. Whenever possible, grade changes for passing other utilities shall be made by gradually varying trench depth.

Unless otherwise approved by the Engineer, water mains shall be laid with at least 10 foot horizontal and 18 inch vertical separation from sanitary or storm sewer, and 3 foot horizontal and 12 inch vertical separation from all other utilities.

Where the water main crosses a sanitary or storm sewer, but cannot be laid within a minimum 18-inch vertical separation,

a) One 18 foot length of water pipe shall be laid so joints are equal distance from the sewer, and
b) The sewer pipe shall be either replaced with ductile iron pipe with joints equally spaced from the water pipe or encased in concrete.

Where the water main must be installed below the sewer, the water main shall be installed with a minimum 18 inch vertical separation and the sewer pipe replaced with ductile iron pipe as detailed in (b), above.

Ductile iron water mains shall be installed in accordance with AWWA Standard

- C600-87 "Installation of Ductile Iron Water Mains and Their Appurtenances"

PVC water mains shall be installed in accordance with the Uni-Bell Plastic Pipe Association's publication "Handbook of PVC Pipe", **except as noted below**, where more stringent requirements are specified.

PVC pipe shall be laid on a cushion of sand bedding. The cushion shall be spread on the bottom of the trench prior to pipe laying and carefully raked to the correct grade. Before final raking of the bedding it shall be tamped by either hand or mechanical means to a compaction of not les than 95 percent of Modified Procter Density. After laying of PVC pipe, sand haunching shall be placed to the spring line of the pipe and tamped by either hand or mechanical means to a compaction of not less than 95 percent of Modified Procter Density. (The installation of haunching is not required for ductile iron pipe.) An initial backfill of sand shall be placed to a minimum height of 12-inches above the pipe. Initial backfill shall be placed in a maximum of 12-inch layers and compacted to not less than 95 percent of Modified Procter Density.

All PVC pipe shall be installed without deflection at the pipe joint of more than 2 degrees, or 80 percent of the maximum allowable by the pipe manufacturer, whichever is the lesser. **All PVC pipe shall be installed without bending of the pipe lengths.** All additional changes in both horizontal and vertical alignment shall be made by the deflection of mechanical joints (M.J.) at fittings; additional M.J. sleeves shall be installed as necessary.

Ductile iron pipe joint deflection shall be limited to 4 degrees (80 percent of maximum allowable under AWWA C600).

On road curves, either short lengths of pipe or mechanical joint sleeves shall be used as needed to limit the pipe joint deflection to within the above noted values. Short lengths and/or fittings shall be utilized on curves of radius less than 280 feet for ductile iron pipe, and 570 feet for PVC pipe.

All PVC pipe and polyethylene services shall be installed with detectable marking (warning) tape installed one foot above the PVC pipe or PE service and brought up to the surface within all valve boxes and fire hydrants.

Unless otherwise specified in the Drawings, all cast iron or ductile iron fittings used on AWWA C-900 PVC pipe shall have mechanical joint ends.

Where more than one pipe is installed in a trench, special care shall be taken to provide adequate bedding at and below the spring of the larger pipe. Provide a minimum of 4-inch clearance between pipes.

Where an electrical telemetry cable is also installed in the trench, the cable shall be installed at the spring line elevation of the largest pipe.

All buried galvanized steel pipe fittings, and all exposed steel pipe or ductile iron pipe threads shall be tightly wrapped with two layers of PVC tape.

Thrust Blocks - All thrust blocks shall be capable of resisting the thrust created from the application of a 225 psi hydrostatic test pressure (i.e., 1.5 times the rated working pressure of the water main material). The minimum bearing area and placement of thrust blocks shall conform to the Drawings, attached hereto.

All concrete thrust blocks, fitting support, etc., shall be Class 3000 per DOT Std. Specif. *Section 7-11.*

Fire Hydrants - Fire hydrants shall be installed in accordance with the Drawings, attached hereto.

Blow-offs - Blow offs shall be installed in accordance with the Drawings, attached hereto.

Service Tapping - The tapping of a water main under pressure ("wet" tapping) shall only be done by a Contractor approved by the Engineer. the "wet" tapping of PVC or Asbestos Cement pipe shall only be done after the Town has partly closed the mains isolating valves to reduce flooding damage should the pipe rupture during tapping.

Service connections 3/4 to 2-inch in diameter shall be installed in accordance with the Drawings, attached hereto. Services shorter than 60 feet in length shall be installed without splices.

Details of service connections over 2-inch in diameter shall be shown in the Drawings for the water main installation or site servicing.

Water Meters - Meters 3/4 to 2-inch in diameter shall be installed in accordance with the Drawings, attached hereto.

Installation details for meters larger than 2-inch in diameter shall be shown on the Drawings for the water main installation or site servicing. Meters shall be installed with isolating valves and bypass in accordance with the Drawings, attached hereto.

Backflow Prevention Assemblies - All backflow prevention assemblies shall be installed in accordance with the recommendations outlined in *Cross Connection Control Manual, Accepted Procedures and Practices,* December 1995 or latest edition thereof, published by the Pacific Northwest Section, American Water Works Association.

Installation details for backflow prevention assemblies larger than 2-inch in diameter shall be shown on the Drawings for the water main installation or site servicing.

Air Release Valves - All air valves shall be vented above ground level to prevent the backflow of groundwater. The air valve shall be installed in accordance with the Drawings, attached hereto.

4. Disinfection:

All new mains and repaired portions or, or extensions to, existing mains shall be disinfected in accordance with:

- AWWA Standard C651-86 "Disinfecting Water Mains"

The placing of calcium hypochlorite granules in each pipe section during laying, as outlined in Section 5.1 "Tablet Method" of AWWA Standard C651, without the additional placement of calcium hypochlorite tablets, shall be done only on mains and services less than 100 feet in length, unless otherwise approved by the Engineer.

Where water is encountered in the trench, care shall be taken to insure that no water or other deleterious materials enter the pipe at any time. Under all conditions, care shall be taken in handling pipe and appurtenances to ensure that no deleterious materials enter the pipe, fittings, valves, etc. Special care shall be taken during the installation to ensure that dirt or other foreign matter does not enter a push-on or mechanical joint of a pipe, valve, fitting, etc.

During the laying of a water main, should dirt or other foreign material enter any pipe, fitting, valve, etc., the main shall be removed, cleaned and relaid. Should sewage enter a main or portion thereof, the main or portion thereof, shall be rejected and all pipe, fittings, valves, etc. discarded.

All water supplied from the existing water system or other approved potable supply shall be connected to the new main through a State of Washington Department of Health "APPROVED" double check valve assembly (DCVA). Such DCVA shall be tested immediately prior to its use by a State Certified backflow prevention assembly tester to verify that it meets State performance requirements. The Contractor shall submit a copy of the tester's test report to the Engineer prior to use of DCVA.

Existing service shall not be transferred to a new water main until a satisfactory bacteriological test report is obtained for the new construction and approval is given by the Engineer.

The final connection to the existing system shall not be made until specifically authorized by the Engineer. Such authorization shall not be made until a satisfactory bacteriological test report is obtained by the Engineer.

All water main components used to make the final closure between the existing and new water main shall be disinfected immediately prior to the installation in accordance with Section 9.2 of AWWA Standard C651.

All equipment used to supply water for water main flushing and disinfection, e.g., standpipe, portable pumps, hose, etc., shall disinfected immediately prior to use in accordance with Section 9.2 of AWWA Standard C651.

5. Leakage and Hydrostatic Pressure Test:

Except as noted below, all water mains (ductile iron or polyvinyl chloride (PVC) pressure pipe) shall be subject to a hydrostatic pressure test and leakage test in accordance with the following AWWA Standard:

- C600-87 "Installation of Ductile Iron Water Mains and Their Appurtenances"

All equipment used by the Contractor for the hydrostatic pressure test and leakage test shall have prior approval of the Engineer.

The test pressure shall be 225 psi (i.e., 1.5 times the rated working pressure of the water main material) applied at the lowest point in the pipeline. The duration of the hydrostatic pressure test shall be 2 hours, during which time the hydrostatic pressure shall not vary by more than 5 psi.

Where in the opinion of the Engineer a 2 hour pressure test is impractical, the duration of the test may be reduced to 15 minutes, as specified in DOT Std. Specif. *Section 7-11.3 (11)*, provided no leakage is detected, (i.e, no loss of pressure). Should leakage occur, the test duration shall be 2 hours.

The leakage test shall be performed only after the Engineer's acceptance of the hydrostatic pressure test. The completion of the pressure test without loss of pressure (i.e., without the need for makeup water), shall be considered as completion of the leakage test.

No water main installation shall be accepted if the leakage is greater than that determined by the formula:

$$L = \frac{SD\,[P]^{0.5}}{133{,}200}$$

where

L = allowable leakage, in gallons per hour
S = total length of main tested, in feet
D = nominal diameter of the main, in inches
P = average test pressure during leakage test, in psi

The leakage test pressure shall be applied at the location of the hydrostatic pressure test and shall be the same pressure and duration as the hydrostatic pressure test.

For acceptance of the new water main installation, any visible leakage detected shall be repaired regardless of the allowable leakage specified above.

6. Pavement Repair and Surface Restoration:

General - All existing asphalt and Portland cement concrete pavement, gravel or crushed rock surface treatments, sidewalks, curbs, gutters, and landscaped surfaces cut or damaged by the installation of sub-surface facilities shall be restored with like materials to original levels, flush, well bonded to adjacent sound material along neat, continuous straight or curved joint lines. Where indicated in the Drawings or required by the Engineer for dust or erosion control, or reasons of safety, temporary surface treatments shall be provided.

Materials - Materials used and methods of construction shall be as shown in the Drawings and details as specified in DOT Std. Specif. *Division 9.*

7. List of Standard Drawings:

The following attached drawings shall be used in conjunction with these Standard Specifications:

W-1	Trench Details	W-2	Thrust Block Details
W-3	Fire Hydrant Details	W-4	Gate Valve Details
W-5	Disinfection & Flushing	W-6	Blow-off Details
W-7	Residential Service Details	W-8	Air Valve Details
W-9	Casing Pipe Road Crossing		
W-23 (E-1) & W-24 (E-2) Erosion Control			

If indicated on the Drawings or in the Bid Documents, reference shall also be made to Standard Drawings W-9 through W-18.

8. Engineer's Inspection:

Pursuant to WAC 246-290-040, the Town/Contractor shall be aware of the requirements for Engineer's inspection and certification of the work and completion of the Department of Health forms "Construction Report for Public Water System Projects" and "Pressure, Leakage and Bacteriological Test Results". Where a specific phase of the work is to be inspected by the Engineer, as noted in these specifications, in the contract documents accompanying these specifications, and/or in the accompanying "Inspection Requirements – Water", the Town/Contractor shall ensure that the work remains accessible until the Engineer's inspection is complete.

In general, the following Engineer's inspections shall be scheduled:

- Start of construction to evaluate construction practice.
- During disinfection and pressure testing.

STANDARD SPECIFICATION FOR WATER MAIN INSTALLATION
Supplement for HDPE Mains
Well Transmission Lines

1. General:

These specifications cover the minimum standards for the installation of 2 to 8-inch diameter high-density polyethylene (HDPE) water mains and appurtenances. These specifications are supplemental to the Town's "Standard Specification - Water Main Installation" previously approved by WA DOH with the Water System Plan or attached to an accompanying Project Report.

These specifications shall be used in conjunction with the contract documents provided by the Town, and with the other portions of a Project Report containing these specifications. These specifications and accompanying drawings were prepared assuming the work would be done by the system operator, or under the direct supervision of the system manager; this operator or manager having knowledge of the existing plant and equipment, and underground utilities.

Where American Water Works Association Standards (A.W.W.A.), American Society for Testing Materials Standards (ASTM), Washington State Department of Transportation Standard Specifications for Road, Bridges and Municipal Construction, 1991 (DOT Std. Specifications) or other standards are referenced within, any further statement of requirements is for the purpose of either highlighting important details of the Standards or to impose more stringent requirements.

No substitution for the material specified herein or in the engineering drawings shall be made without prior approval of the Town. No change of the water main alignment, water main diameter, etc. shown on the engineering drawings may be made without the prior approval of the Town and Engineer.

Where a manufacturer's product is specified by name and model, the intent is to:

a. Establish a minimum standard where either a A.W.W.A. Standard is not available, or where the standard of performance exceeding A.W.W.A. Standards is desired,
b. Conform to existing products in the distribution system or to provide inventory uniformity for the purpose of maintenance.

The approval of alternate materials to those specified by manufacturer's name and model, as an "approved equal" shall be at the sole discretion of the Town.

2. Materials:

HDPE Mains - Unless otherwise specified in the drawings, all HDPE water mains and fittings shall conform to the following American Water Works Association (A.W.W.A.) Standard:

> C906-99 "Polyethylene (PE) Pressure Pipe and Fittings, 4 inch (100 mm) through 63 inch (1,575 mm), for Water Distribution and Transmission".
>
> C901-96 ""Polyethylene (PE) Pressure Pipe and Tubing, ½-inch (13 mm) through 3 inch (76 mm), for Water Service".

All HDPE water mains shall have an outside diameter compatible with iron pipe in accordance with A.W.W.A. C-906, Table 3, unless otherwise approved by the Engineer.

HDPE pipe shall be either:

> Driscopipe 8600 ultra high molecular weight high-density polyethylene, minimum pressure class 160 psi (SDR 11), as manufactured by Phillips Petroleum.
>
> Sclairpipe high-density polyethylene pipe, minimum pressure class 160 psi (SDR 11), as manufactured by KWH Pipe.

Pipe 3-inch and larger shall be supplied in straight lengths.

For pipe installed above ground over embankments, the minimum pressure class shall be 200 psi (SDR 9). The Contractor shall obtain verification from the HDPE pipe manufacturer that the pipe thickness (SDR) supplied provides adequate strength to support the weight of the completed main (pipe plus water plus insulation plus tape wrap). The pipe thickness shall be increased as required to provide adequate tensile strength for the conditions of installation.

Service Saddles - Service saddles shall be Ford Meter Box Co. banded type service saddles, series FS202, with outside diameter for HDPE pipe, and standard tapping (saddles required for all service sizes), or Engineer approved equal. Service saddles shall be of a type approved for use by the manufacturer supplying the HDPE pipe.

Branch Tees and Crosses - Unless otherwise specified in the Plans or in these specifications, all tees (other than service connections) and crosses shall be flanged ductile iron as stipulated in the Town's accompanying "Standard Specifications - Water Main Installation".

3. Installation:

General - Unless otherwise specified in the Plans or in these specifications, water mains shall be installed in accordance with the manufacturer's printed specifications, and to the requirements stated in the Town's accompanying "Standard Specifications - Water Main Installation".

Trenching/Backfill - Trenching, foundation, bedding and backfilling for water mains and incidental piping shall conform to requirements for PVC pipe stated in the Town's accompanying "Standard Specifications - Water Main Installation".

Thermal Fusion of Joints - Thermal (butt) fusion of joints shall be done by the HDPE pipe manufacturer's staff or manufacturer trained and approved contractor.

Flanged Assemblies - Connection to valves and ductile iron fittings shall be by butt fused flange adapter on stub end to pipe, with steel pipe slip flange. Assembly in the field of long sections of pipe may be joined by two butt fused flanged adapters with slip flanges.

Thermal Expansion - Thermal expansion of HDPE pipe (neglecting soil restraint) is approximately 1.4 inches per 100 feet per 10° F temperature change. For buried mains, a minimum water temperature change of 20° F should be anticipated. Connection to existing slip-on joint PVC or ductile iron pipe shall be at a gate valve, installed with a support anchor block as shown in the Town's "Standard Specifications - Water Main Installation", plan W-4 "Gate Valve Detail".

Where the HDPE pipe cannot be installed with "snaking" or with curvature to accommodate thermal expansion between valves and fittings, a flanged restrained joint expansion sleeve, EBAA Iron "Ex-Tend" or equal, shall be provided for each 200 feet of HDPE pipe or as otherwise shown on the accompanying project drawings.

4. Disinfection:

All new mains and repaired portions or, or extensions to, existing mains shall be disinfected in accordance with the Town's accompanying "Standard Specifications - Water Main Installation".

5. Leakage and Hydrostatic Pressure Test:

All new mains shall be tested in accordance with the Town's accompanying "Standard Specifications - Water Main Installation" (minimum of 225 psi or 50% above the operating pressure, whichever is greater, for 2 hours).

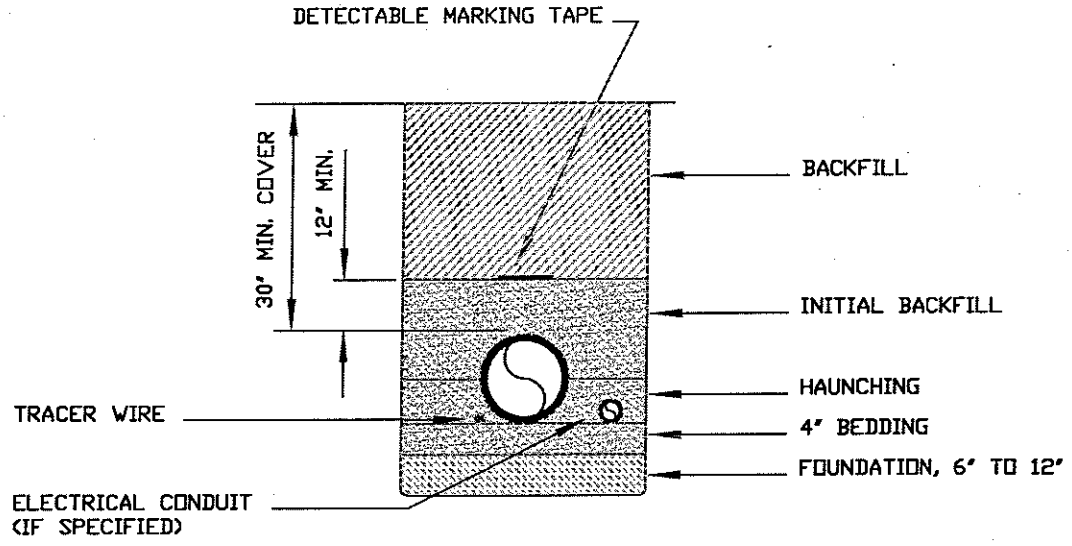

TRENCH DETAILS, PVC & HDPE PIPE

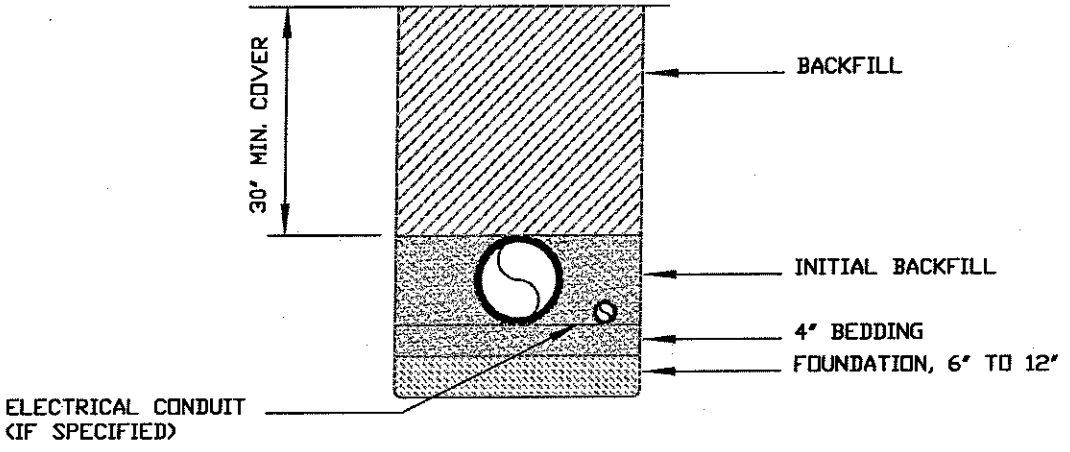

TRENCH DETAILS, DUCTILE IRON PIPE

NOTES:

1) SEE TOWN OF COUPEVILLE "STANDARD PLANS & SPECIFICATIONS FOR WATER MAIN INSTALLATION" FOR TRENCHING, FOUNDATION, BEDDING AND BACKFILL REQUIREMENTS.

2) ONLY IMPORTED MATERIAL SHALL BE USED FOR BEDDING, HAUNCHING AND INITIAL BACKFILL OF PVC PIPE UNLESS OTHERWISE APPROVED BY PUBLIC WORKS DIRECTOR.

3) FOUNDATION MATERIAL IS INTENDED ONLY FOR OVER CUT OR UNSUITABLE NATIVE MATERIAL REPLACEMENT.

4) MINIMUM TRENCH WIDTH SHALL BE NOMINAL PIPE DIAMETER PLUS 7 INCHES EACH SIDE. UNLESS OTHERWISE APPROVED BY PUBLIC WORKS DIRECTOR.

5) WITHIN THE TOWN LIMITS, TRENCH BACKFILL UNDER PAVEMENT, ROAD SHOULDERS AND SIDEWALKS SHALL BE CONTROL DENSITY FILL (CDF). THE CDF SHALL BE A BATCH PLANT MIX OF SAND WITH 1 TO 2 SACKS OF PORTLAND CEMENT PER CUBIC YARD.

6) WITHIN COUNTY RIGHTS-OF-WAY, TRENCH BACKFILL UNDER PAVEMENT, ROAD SHOULDERS AND SIDEWALKS SHALL BE IN ACCORDANCE WITH CONDITIONS SPECIFIED IN COUNTY'S ROAD PERMIT.

Date: Dec. 08	Scale: N.T.S.	TOWN OF COUPEVILLE STANDARD PLAN	Plan #
By: GEORGE BRATTON, P.E. CIVIL ENGINEER		TRENCH DETAILS	W-1

BEARING AREA (SQ. FT.) FOR HORIZONTAL THRUST, BASED ON 225 PSI TEST PRESSURE & 2,000 PSF SOIL BEARING	2"ø & 3"ø	4"ø	6"ø	8"ø	10"ø	12"ø
TEES, CAP & PLUG (A x B)	1.5	2.5	5.0	8.5	13.5	19.0
90° BEND (A x B)	2.0	3.0	7.0	12.0	19.0	27.0
45° BEND (A x B)	1.0	2.0	4.0	6.5	10.5	15.0
22.5° BEND (A x B)	1.0	1.0	2.0	3.5	5.5	7.5
11.25° BEND (A x B) & FRT.. BEND DOWNWARD	1.0	1.0	1.0	2.0	3.0	4.0
FITTING WEIGHT SUPPORT FOR PVC PIPE		1.0	1.0	1.0	1.0	1.0
VOLUME-WEIGHT (CU. YDS.) FOR VERTICAL THRUST						
11.25° BEND (C x D x W)		2.0	4.0	7.0	11.0	15.0

ALL CONCRETE BLOCKS SHALL BE POURED AGAINST DRY, UNDISTURBED EARTH. KEEP CONCRETE CLEAR OF JOINTS GLANDS AND ACCESSORIES. FOR TIE DOWN VERTICAL BENDS AND VALVES, USE 3/4"ø STAINLESS STEEL RODS, 2 PER FITTING OR VALVE. BEARING AREA / VOLUME IN TABLE INCLUDES 1.5 SAFETY FACTOR.

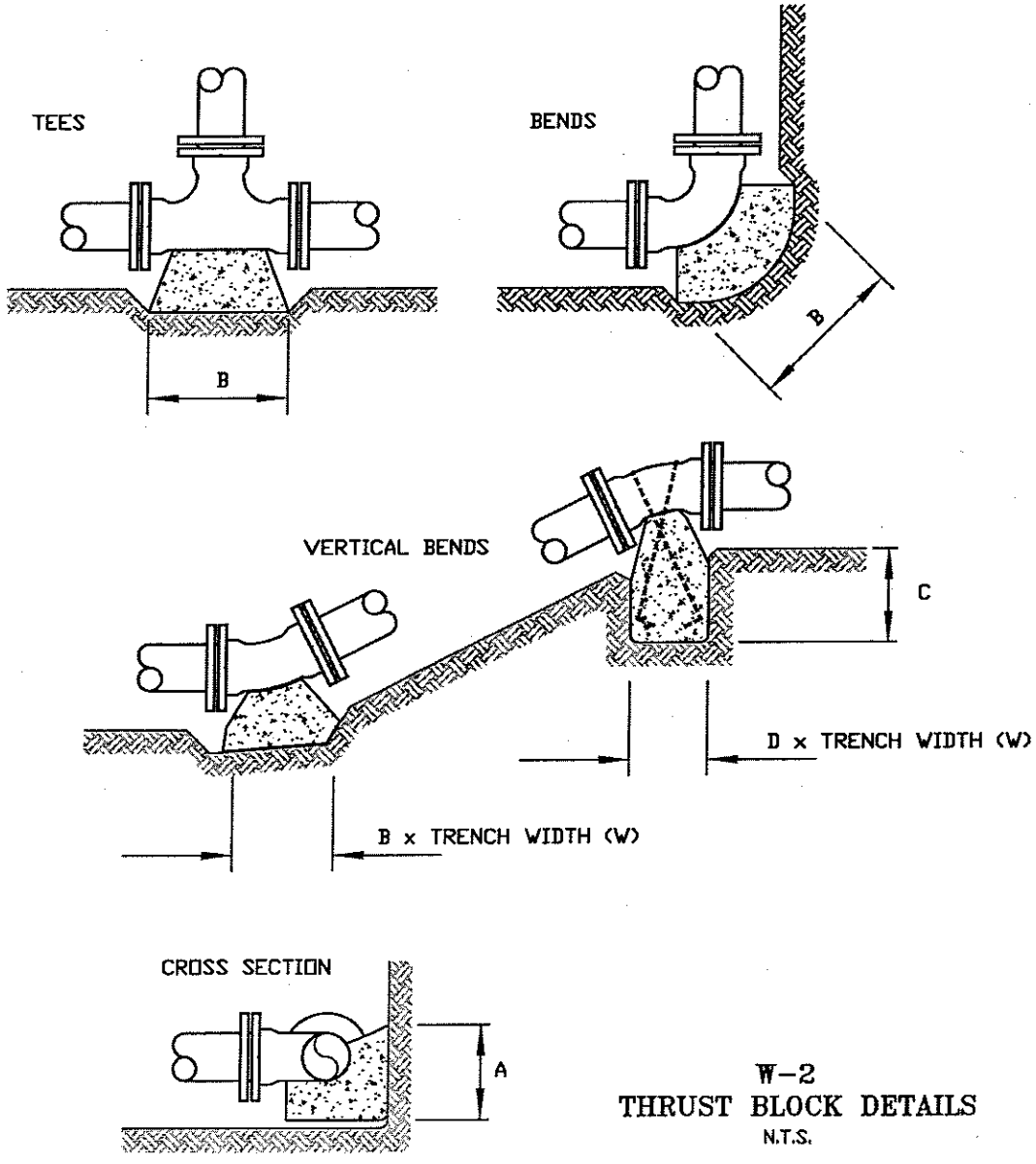

W-2
THRUST BLOCK DETAILS
N.T.S.

Date: Dec. 08	Scale: N.T.S.	TOWN OF COUPEVILLE STANDARD PLAN THRUST BLOCK DETAILS	Plan # W-2
By: GEORGE BRATTON, P.E. CITY ENGINEER			

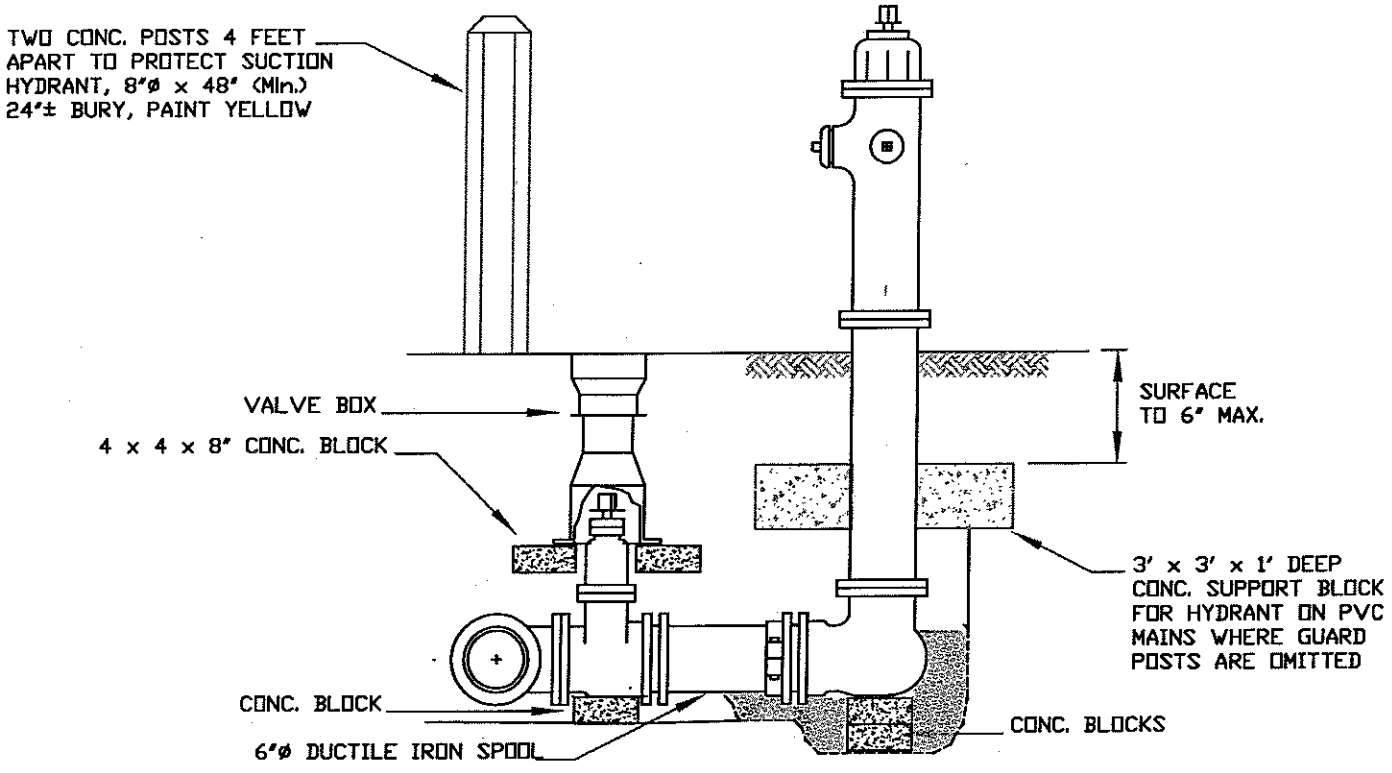

SEE DRAWING W-3B FOR ADDITIONAL DETAILS

CONFIRM SIZE AND THREAD WITH TOWN'S APPROVED MATERIALS LIST BEFORE PURCHASE.

INSTALL HYDRANT PLUMB.

Date: Dec. 08	**Scale:** N.T.S.	TOWN OF COUPEVILLE STANDARD PLAN FIRE HYDRANT DETAILS – ROAD SHOULDER	**Plan #** W-3A
By: GEORGE BRATTON, P.E. CIVIL ENGINEER			

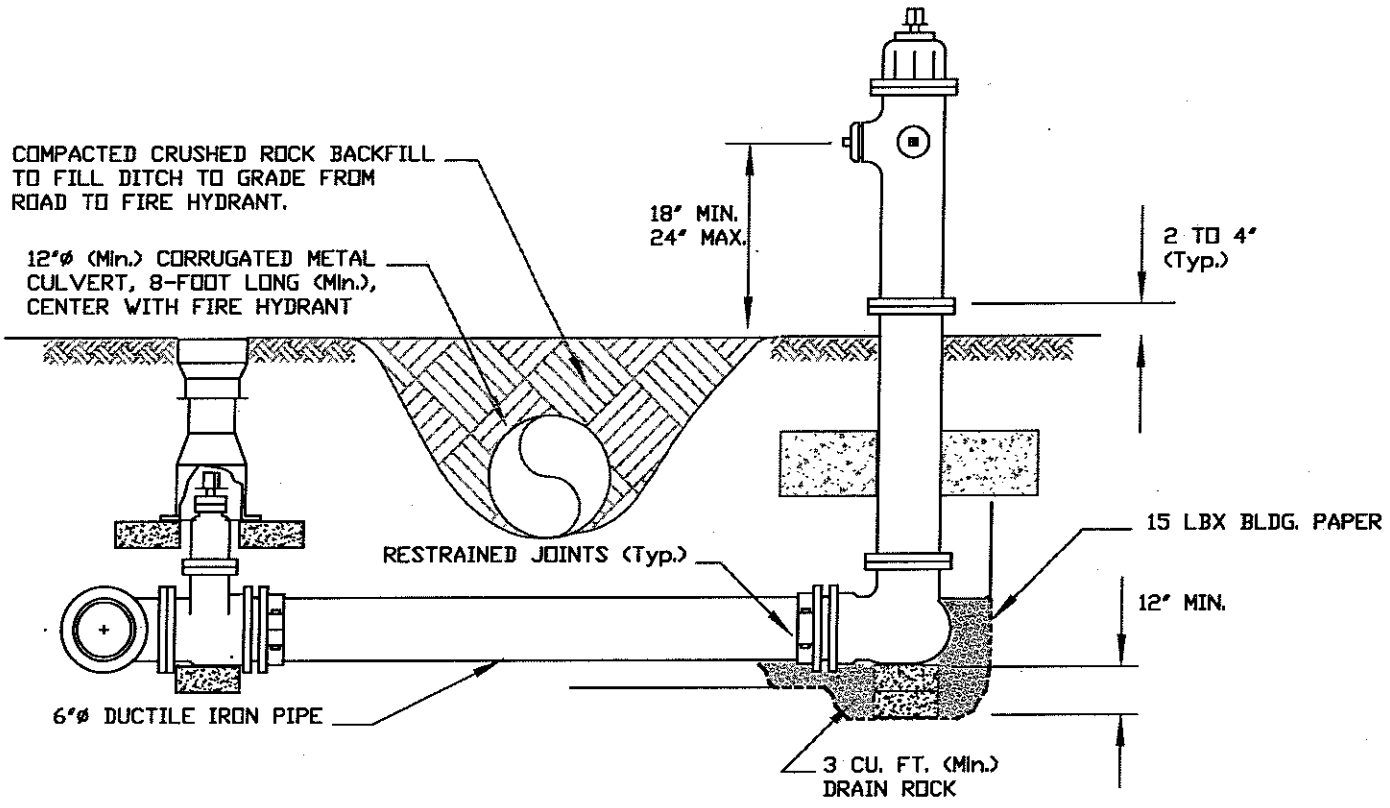

SEE DRAWING W-3A FOR ADDITIONAL DETAILS

Date: Dec. 08	**Scale:** N.T.S.	TOWN OF COUPEVILLE STANDARD PLAN FIRE HYDRANT DETAILS – BEHIND ROAD DITCH	**Plan #** W-3B
By: GEORGE BRATTON, P.E. CIVIL ENGINEER			

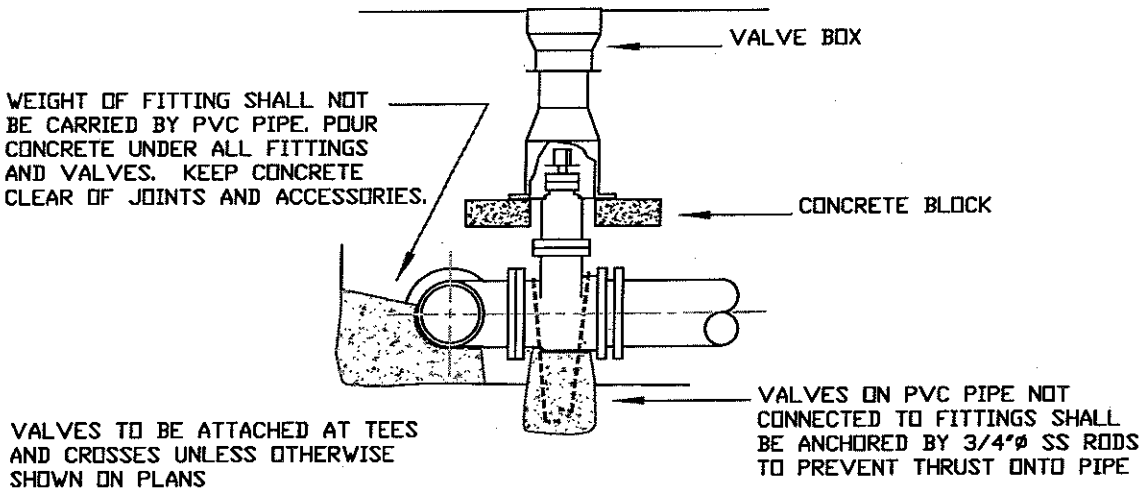

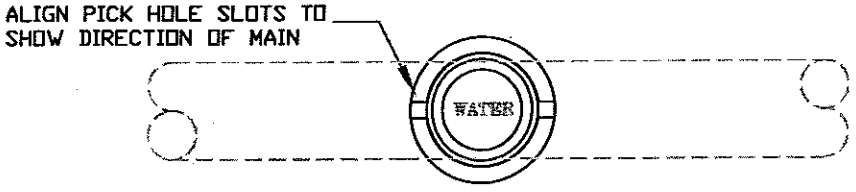

Date: Dec. 08	**Scale:** N.T.S.	TOWN OF COUPEVILLE STANDARD PLAN GATE VALVE DETAILS	**Plan #** W-4
By: GEORGE BRATTON, P.E. CIVIL ENGINEER			

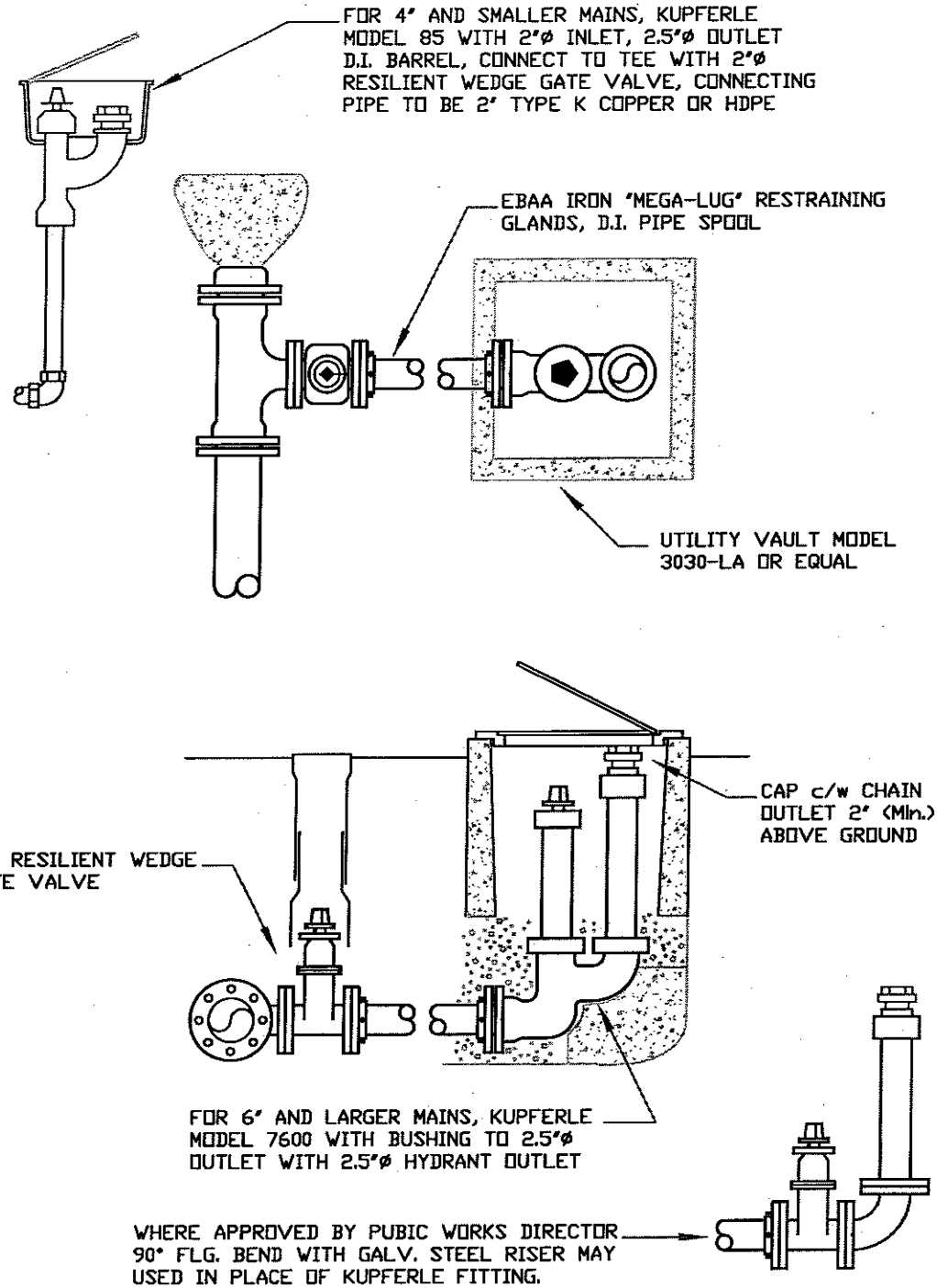

Date: Dec. 08	**Scale:** N.T.S.	TOWN OF COUPEVILLE STANDARD PLAN BLOW-OFF ASSEMBLY DETAILS	**Plan #** W-5
By: GEORGE BRATTON, P.E. CIVIL ENGINEER			

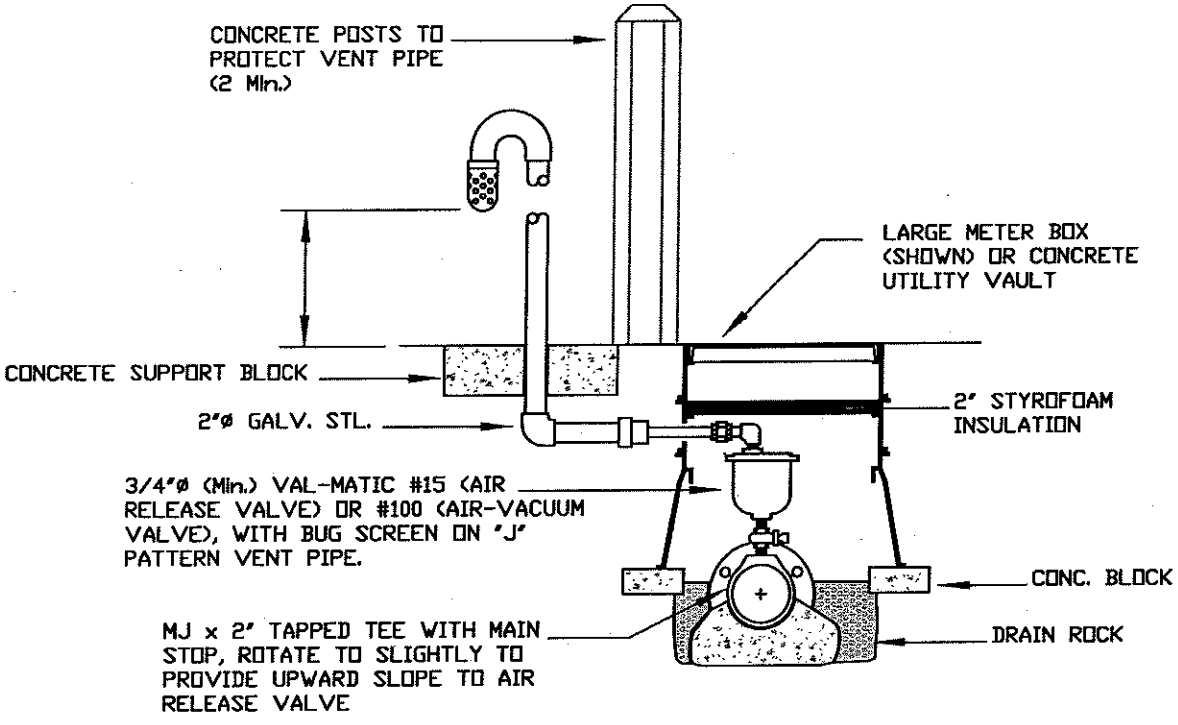

Date: Dec. 08	**Scale:** N.T.S.	TOWN OF COUPEVILLE STANDARD PLAN AIR RELEASE VALVE ASSEMBLY DETAILS – VAULT	Plan # W–6A
By: GEORGE BRATTON, P.E. CIVIL ENGINEER			

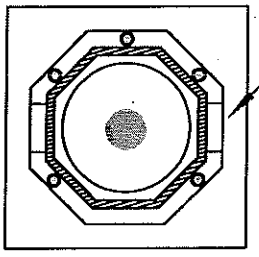

"VENT GUARD" BY HOT BOX, FOAM INSULATED FIBERGLASS ENCLOSURE WITH DRAINAGE OUTLETS, LOCKABLE LID, MODEL #1824, COLOR DARK BLUE UNLESS OTHERWISE SPECIFIED BY OWNER

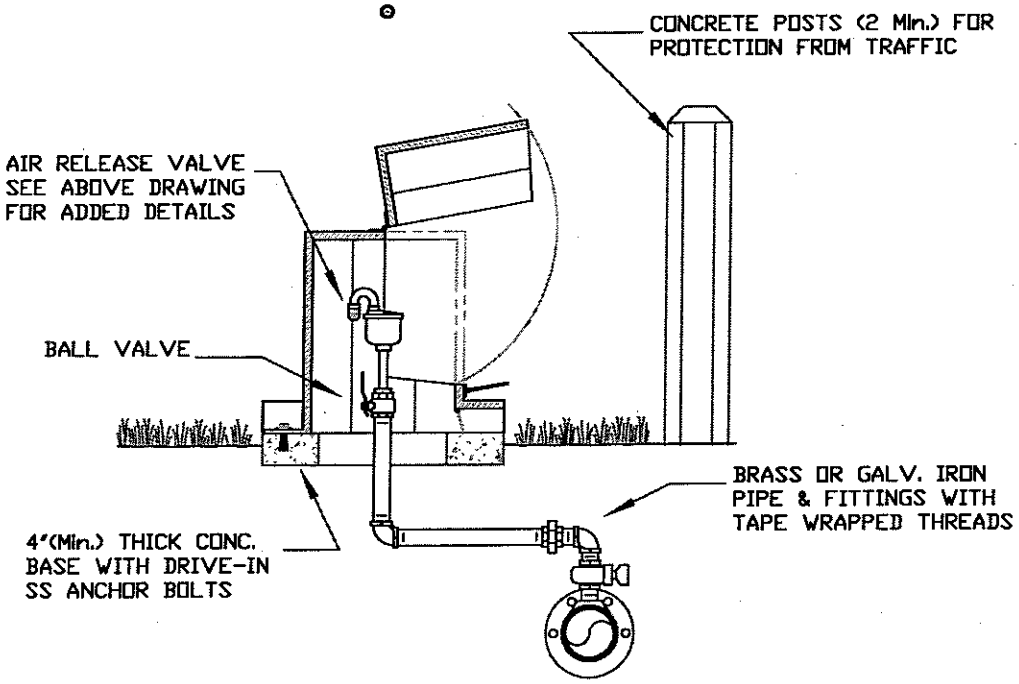

Date: Dec. 08	Scale: N.T.S.	TOWN OF COUPEVILLE STANDARD PLAN AIR RELEASE VALVE ASSEMBLY DETAILS – HOT BOX	Plan # W-6B
By: GEORGE BRATTON, P.E. CIVIL ENGINEER			

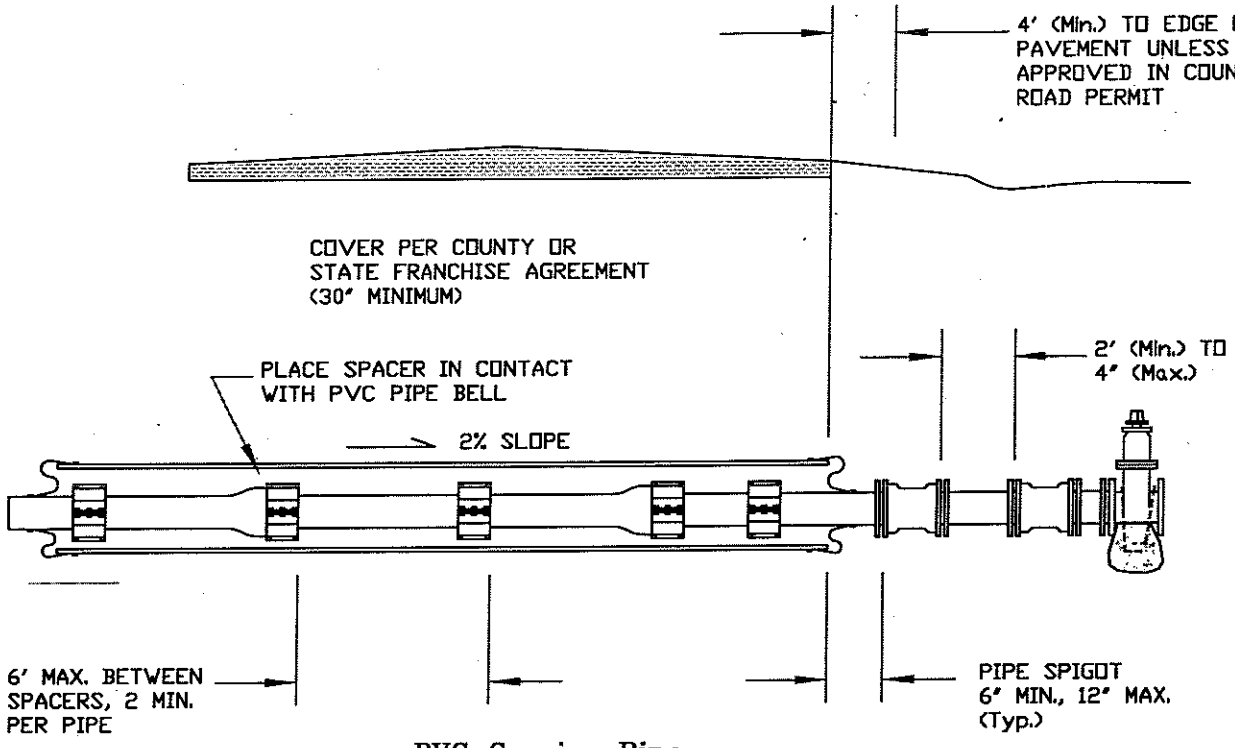

PVC Carrier Pipe

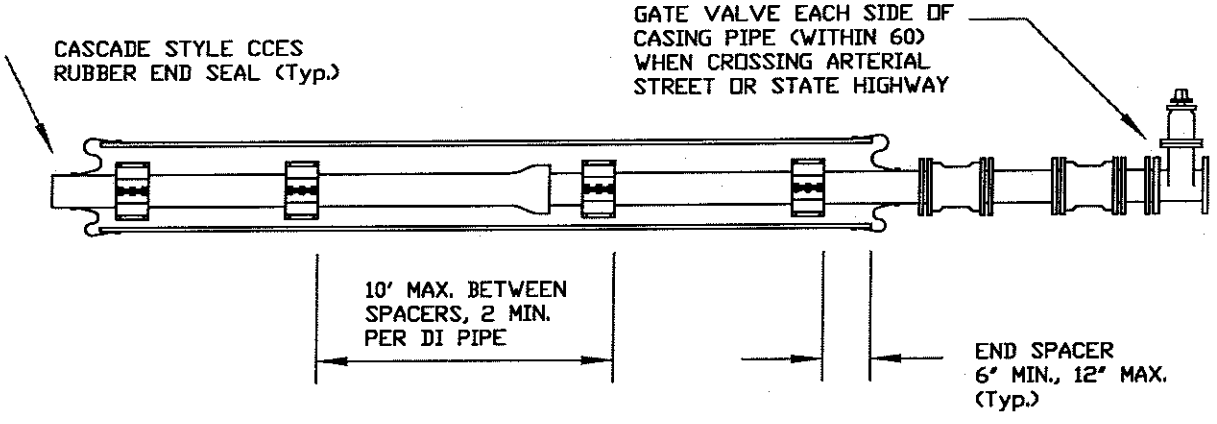

Ductile Iron Carrier Pipe

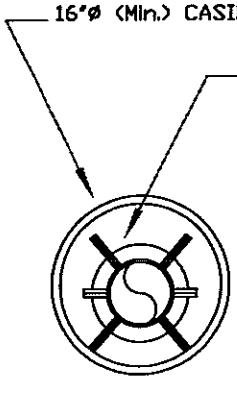

FOR JACKED INSTALLATIONS, USE 1/4" (Min.) WALL, 16" OD, STRAIGHT SEAM, ASTM A-135 STEEL PIPE JOINED BY BUTT WELDING.

FOR OPEN CUT INSTALLATION, USE CORRUGATED STEEL PIPE OR OTHER ISLAND COUNTY APPROVED CASING MATERIAL, BACKFILL WITH CONTROL DENSITY FILL (CDF)

FOR SEWER CROSSING, INSTALL DUCTILE IRON PIPE WITH ENDS 10-FEET (Horiz.) CLEAR OF CROSSING

CASING PIPES ARE REQUIRED FOR ALL WATER MAINS CROSSING ISLAND COUNTY ROADS.

Date: Dec. 08	**Scale:** N.T.S.	TOWN OF COUPEVILLE STANDARD PLAN CASING PIPE DETAILS	Plan # W-7
By: GEORGE BRATTON, P.E. CIVIL ENGINEER			

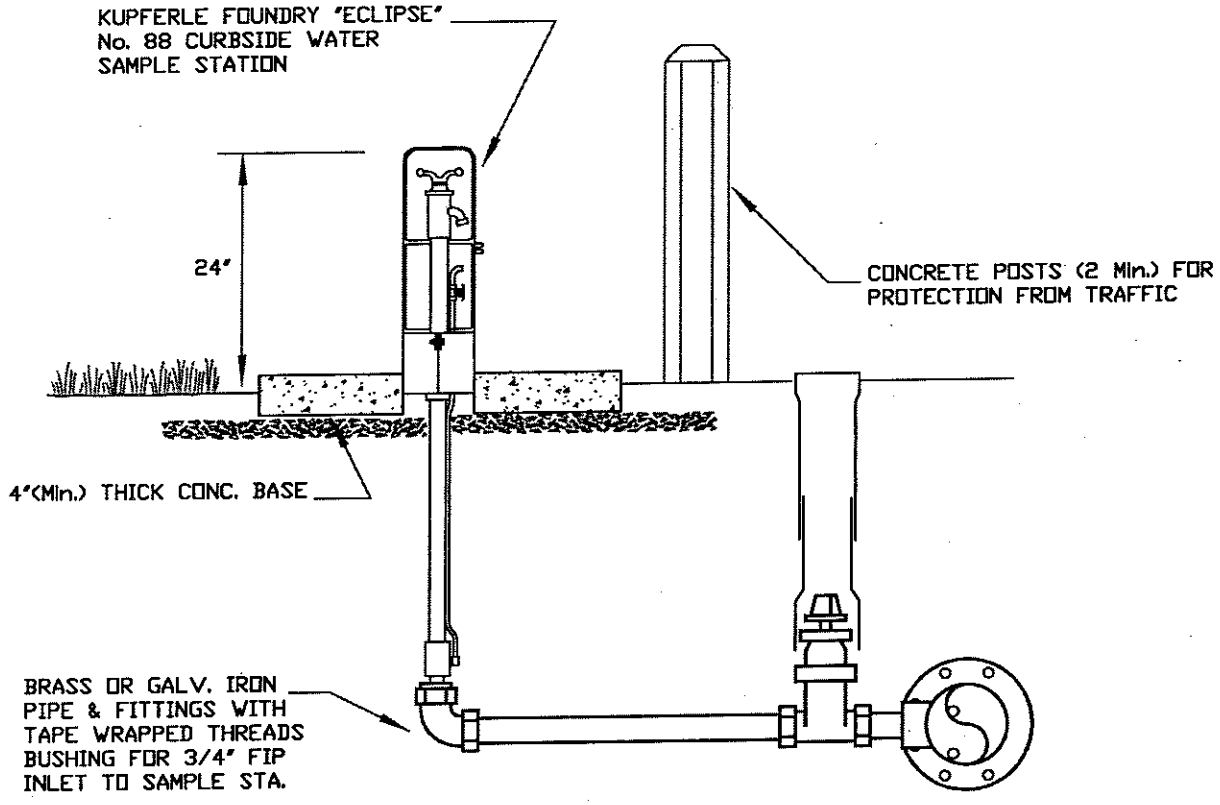

CURBSIDE WATER SAMPLE STATION DETAILS

Date: Dec. 08	**Scale:** N.T.S.	TOWN OF COUPEVILLE STANDARD PLAN CURBSIDE WATER SAMPLE STATION DETAILS	Plan # W-8
By: GEORGE BRATTON, P.E.			

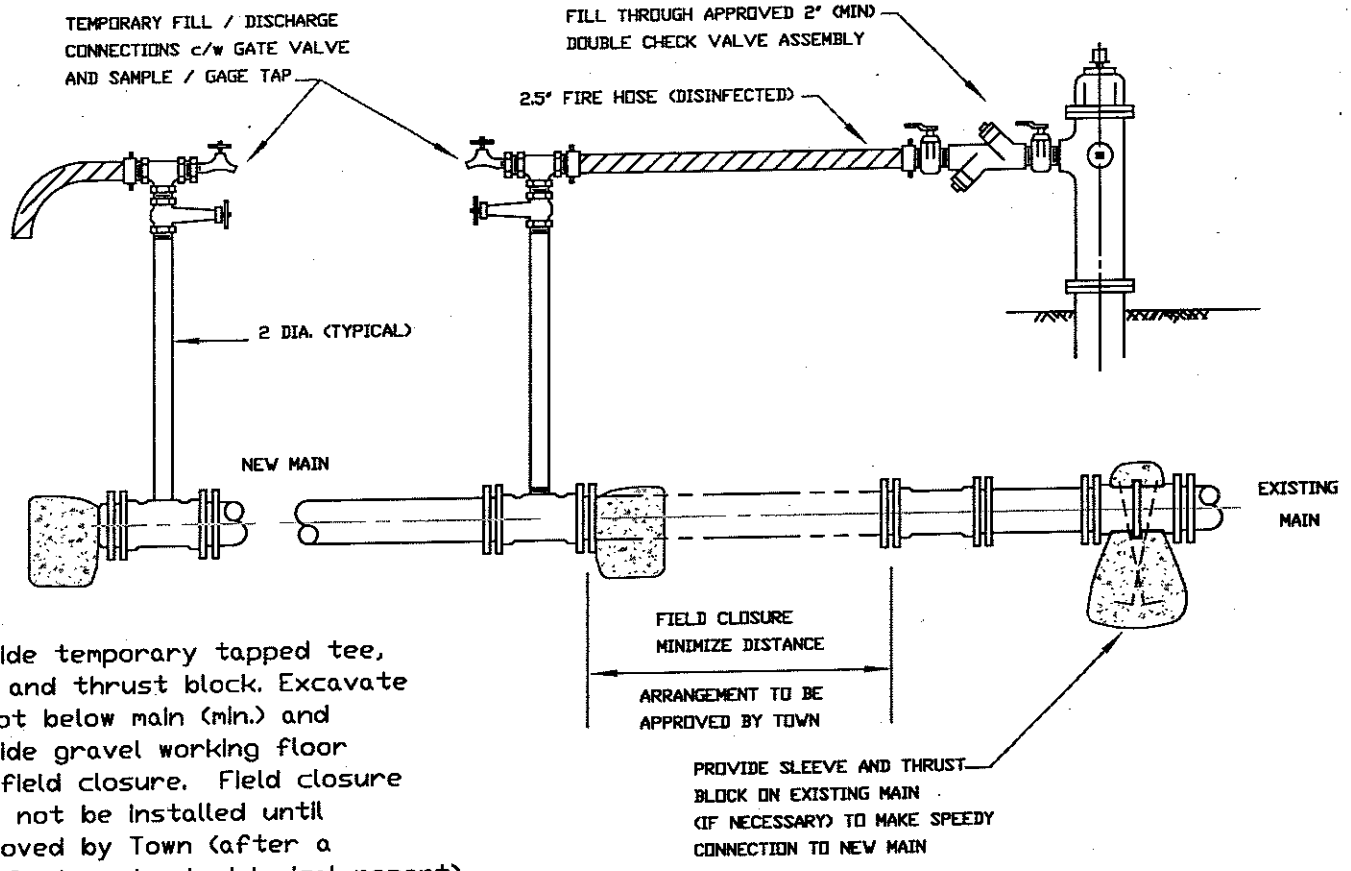

NOTE:
Provide temporary tapped tee, plug and thrust block. Excavate 1 foot below main (min.) and provide gravel working floor for field closure. Field closure shall not be installed until approved by Town (after a satisfactory bacteriological report) Minimum chlorine level after 24 hour retention shall be 25 mg/L. De-chlorinate all water flushed from mains.

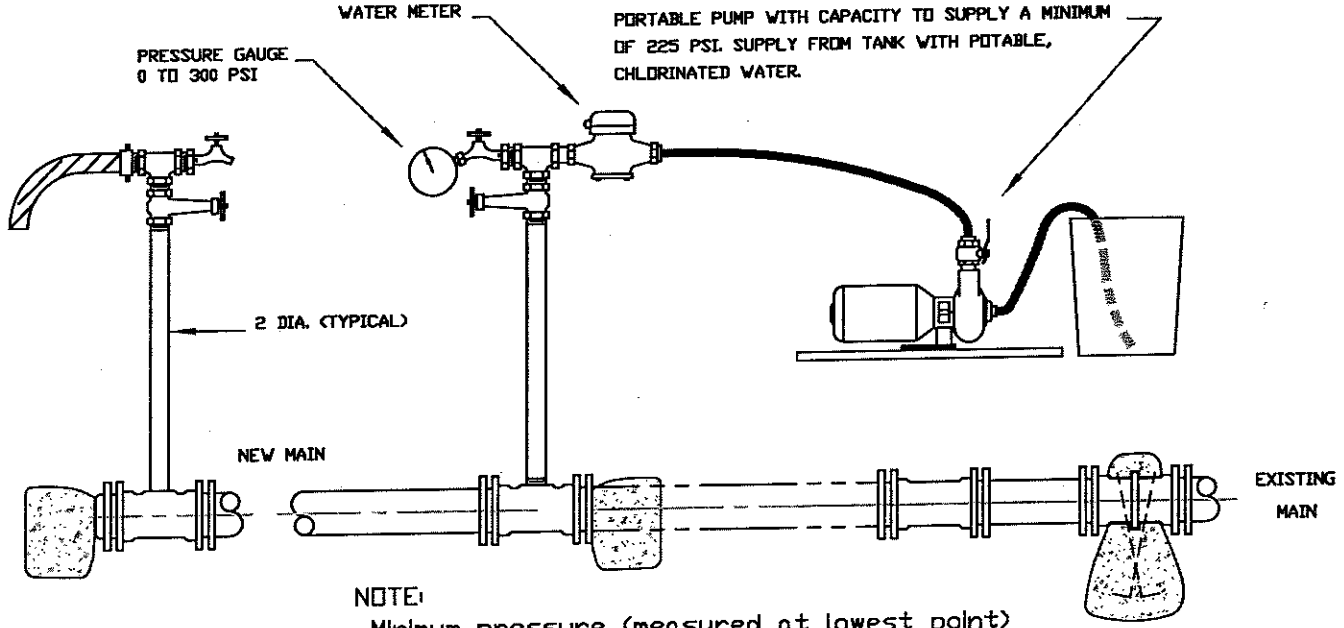

NOTE:
Minimum pressure (measured at lowest point) shall be 225 psi. Pressure shall be maintained for minimum of 2 hours with less than 10 psi drop in pressure and less than 1 gallon of makeup water.

Date: Dec. 08	**Scale:** N.T.S.	TOWN OF COUPEVILLE STANDARD PLAN FLUSHING, DISINFECTION & PRESSURE TEST DETAILS	Plan # W-9
By: GEORGE BRATTON, P.E. CIVIL ENGINEER			

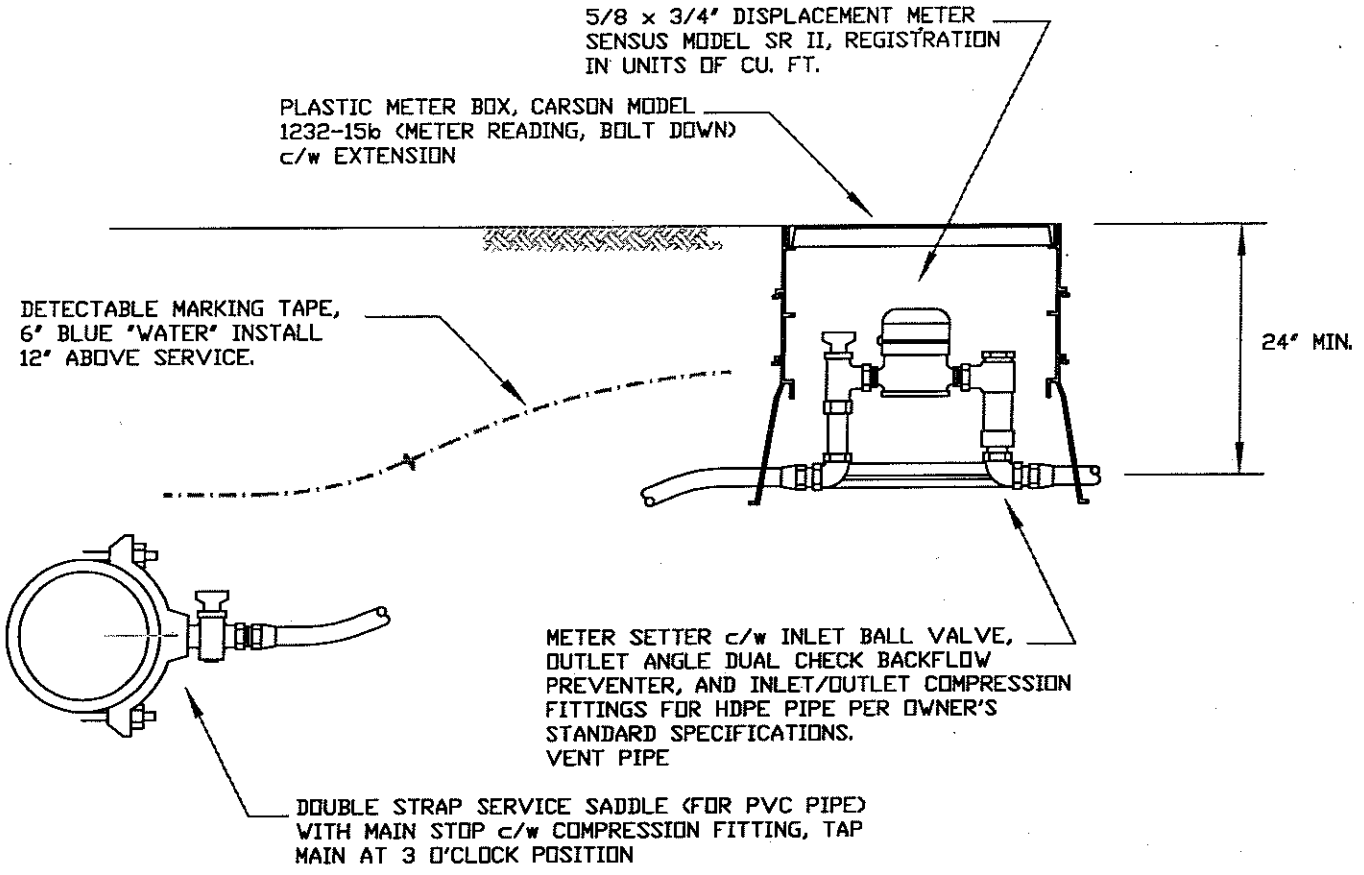

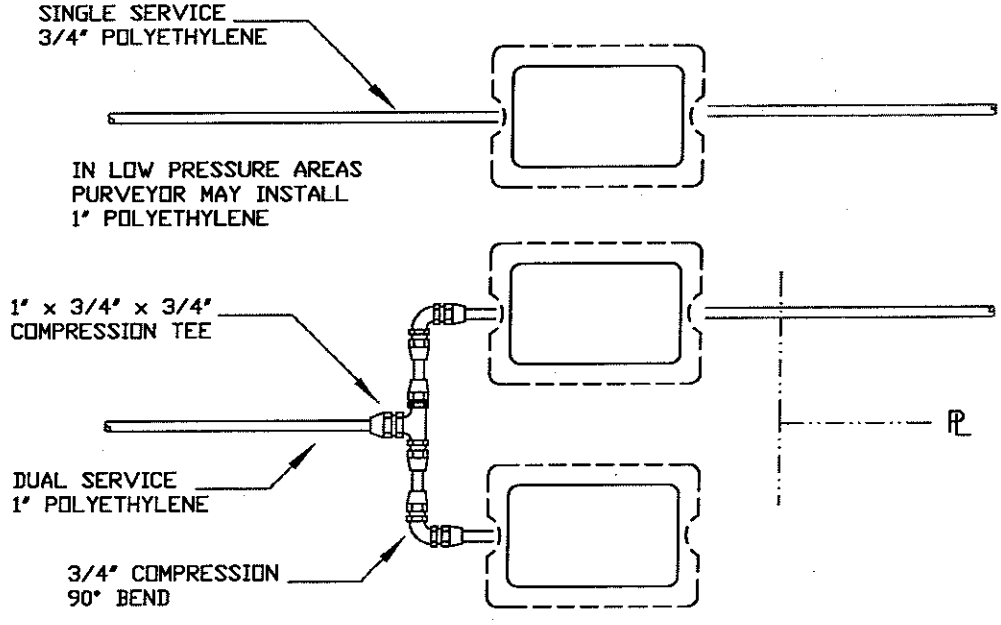

ON ROAD CROSSING, PURVEYOR
MAY INSTALL SINGLE 1"ø SERVICE
WITH TWO METER BOXES AT PROPERTY
LINE BETWEEN CUSTOMERS

Date: Dec. 08	**Scale:** N.T.S.	TOWN OF COUPEVILLE STANDARD PLAN RESIDENTIAL SERVICE DETAILS	**Plan #** W-10
By: GEORGE BRATTON, P.E. CIVIL ENGINEER			

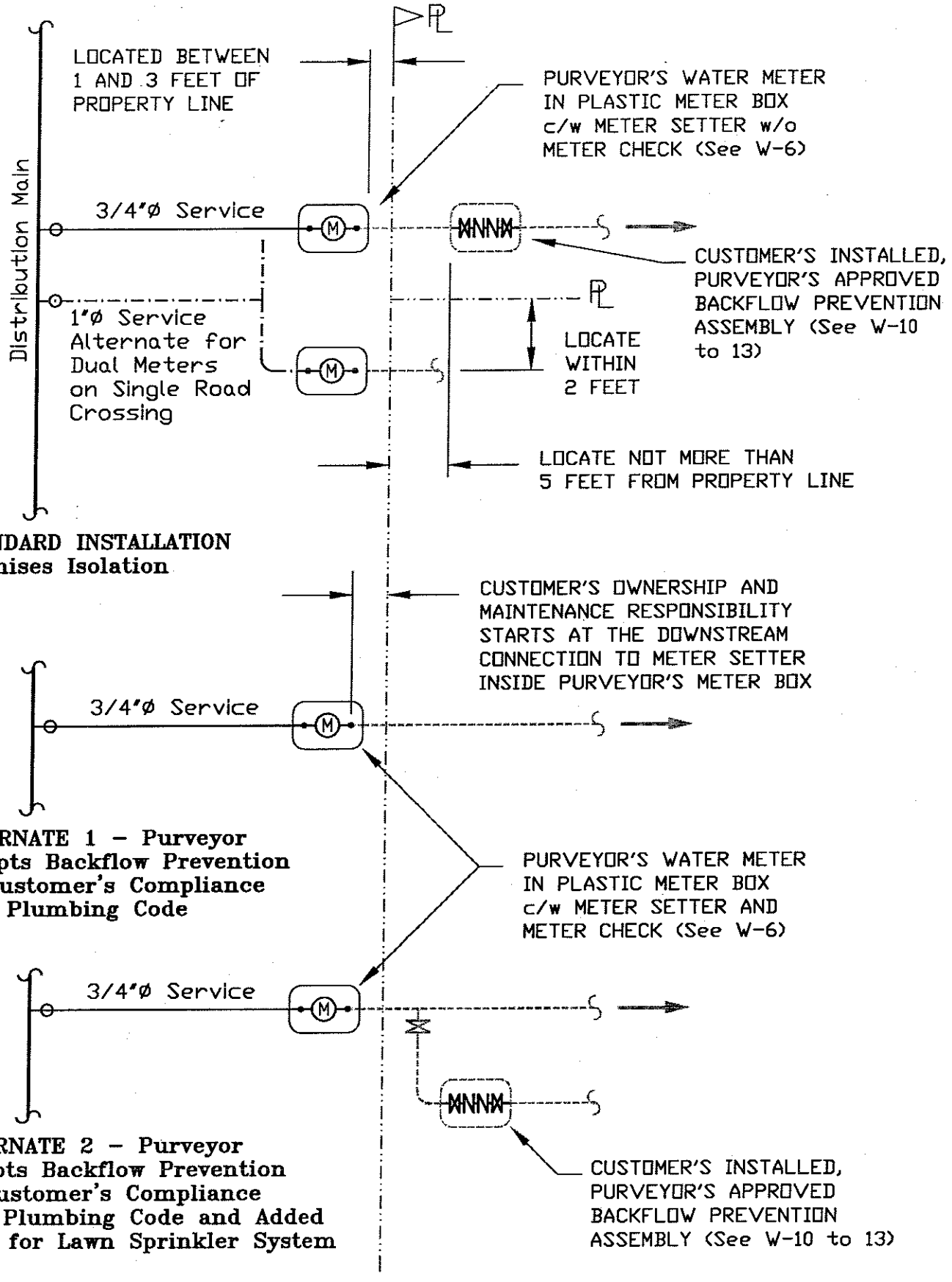

Note: Purveyor's distribution main and service pipe shall not be used as ground for Customer's electrical system.

Date: Dec. 08	**Scale:** N.T.S.	TOWN OF COUPEVILLE STANDARD PLAN RESIDENTIAL SERVICE CONNECTION DETAILS	**Plan #** W–11
By: GEORGE BRATTON, P.E. CITY ENGINEER			

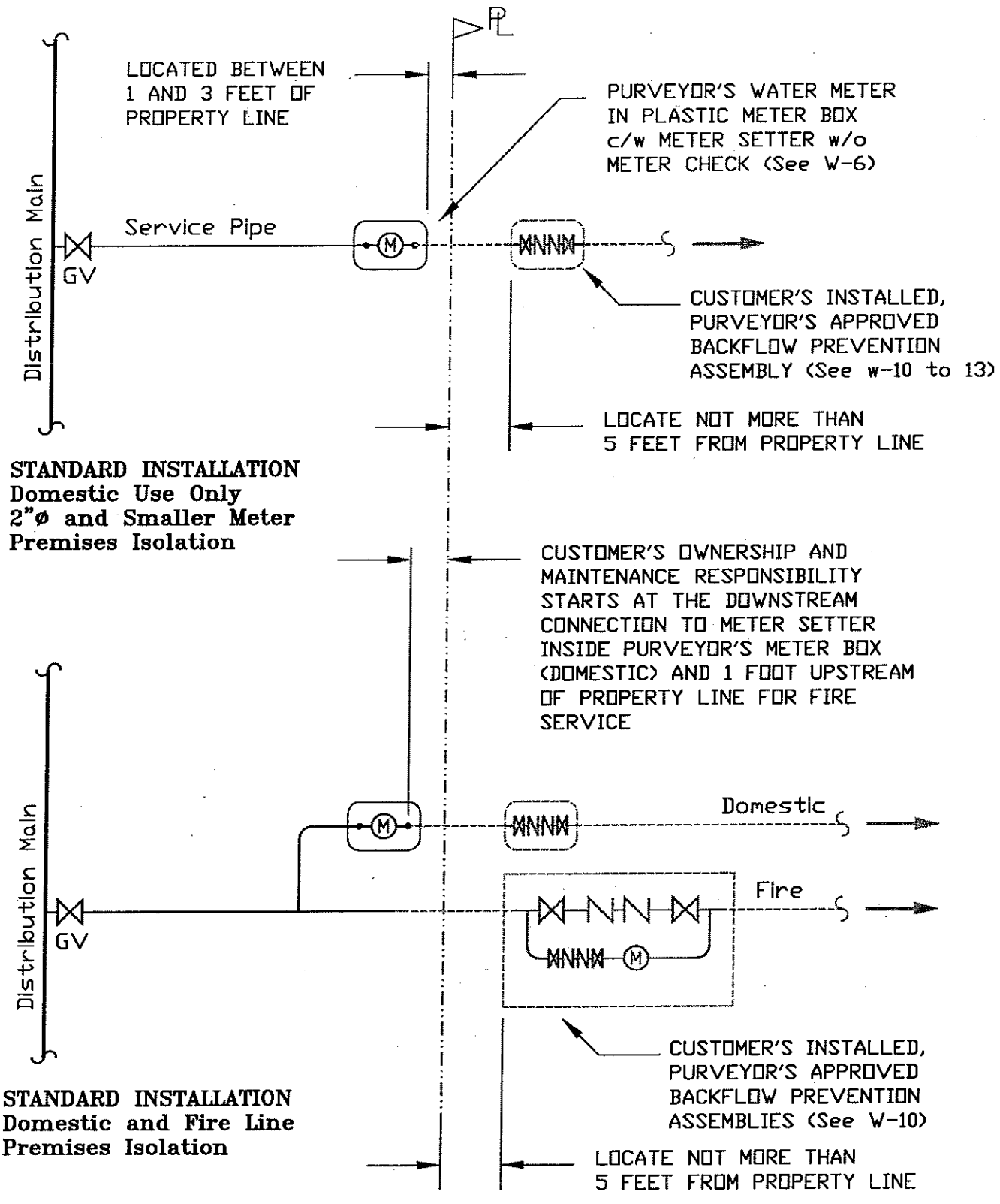

Note: The category 'Commercial Customer' shall include all non-single family or duplex residential customers.

Domestic and fire line line backflow assemblies may be installed in building per Purveyor approved service agreement.

Date: Dec. 08	**Scale:** N.T.S.	**TOWN OF COUPEVILLE** **STANDARD PLAN** COMMERCIAL SERVICE CONNECTION DETAILS	**Plan #** **W-12**
By: GEORGE BRATTON, P.E. CIVIL ENGINEER			

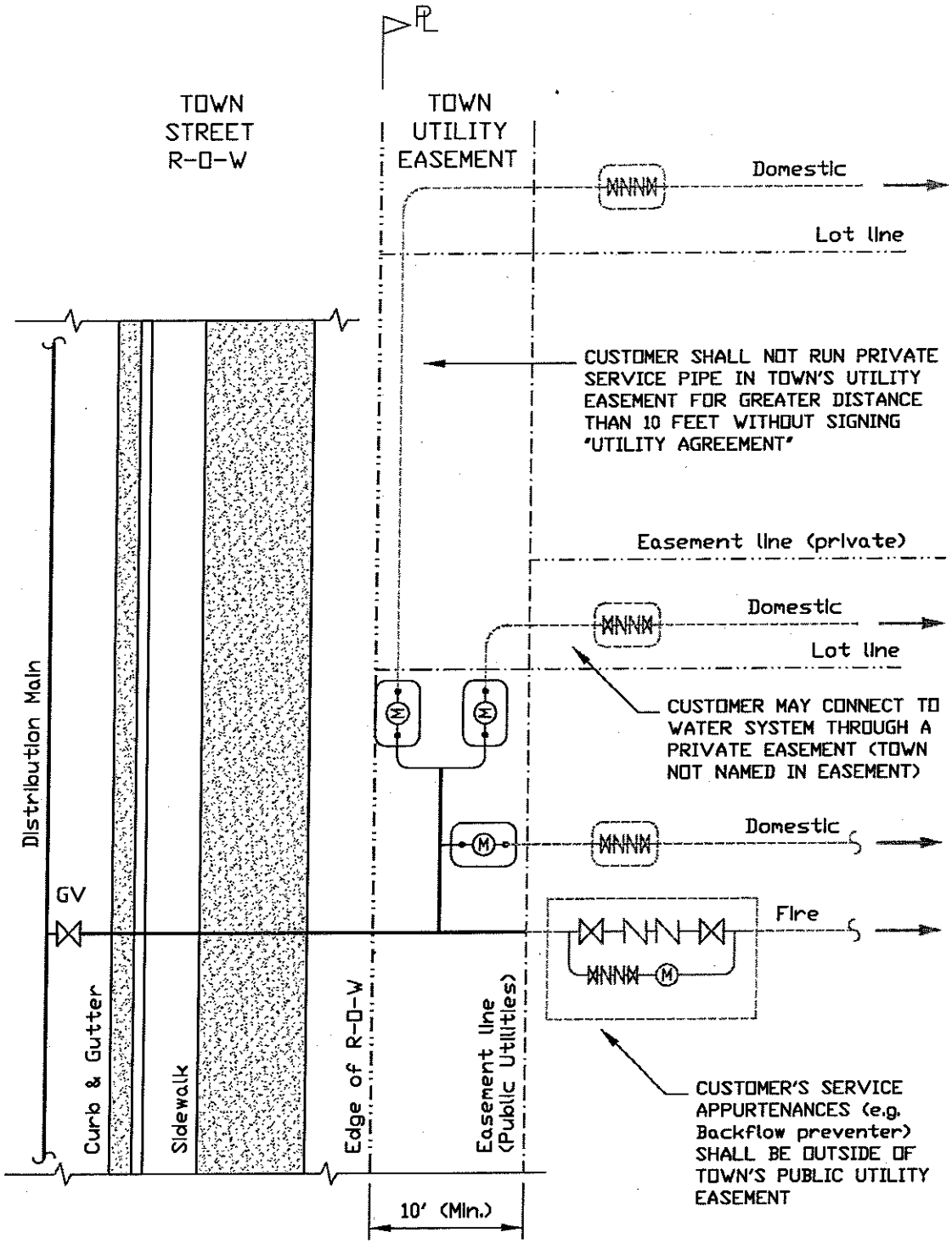

Date: Dec. 08	**Scale:** N.T.S.	TOWN OF COUPEVILLE STANDARD PLAN EASEMENT LOCATED METER DETAILS	**Plan #** W-13
By: GEORGE BRATTON, P.E. CIVIL ENGINEER			

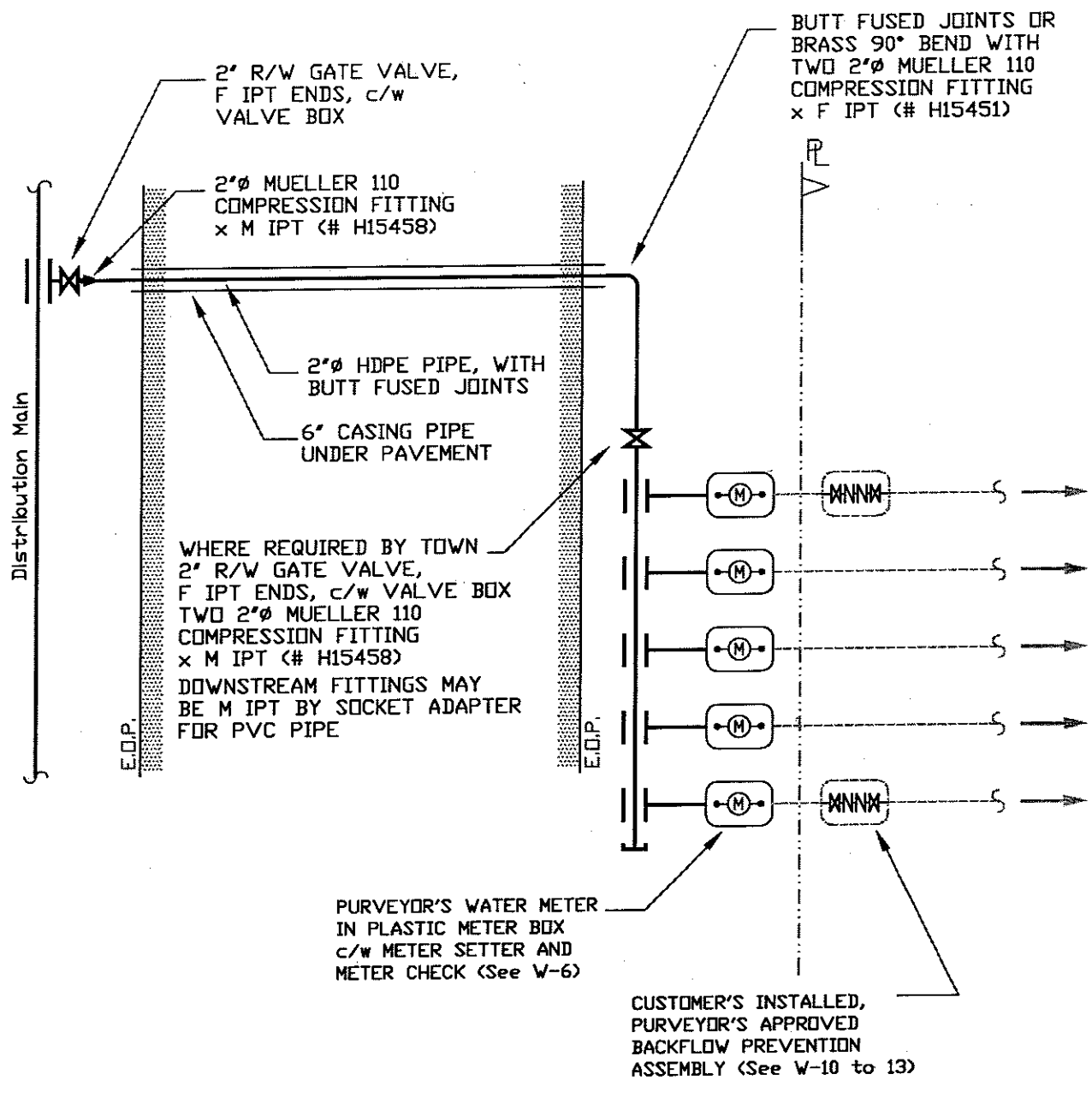

NOTES:

BANK OF METERS TO BE INSTALLED ONLY WHERE 2"ø COMMON HDPE PIPE IS INSTALLED TO CROSS STREET TO AVOID MULTIPLE PAVEMENT CUTS OR JACKED CASINGS FOR EACH SERVICE.

Date: Dec. 08	**Scale:** N.T.S.	TOWN OF COUPEVILLE STANDARD PLAN BANK OF 3 TO 6 METER DETAILS	**Plan #** W-14
By: GEORGE BRATTON, P.E. CIVIL ENGINEER			

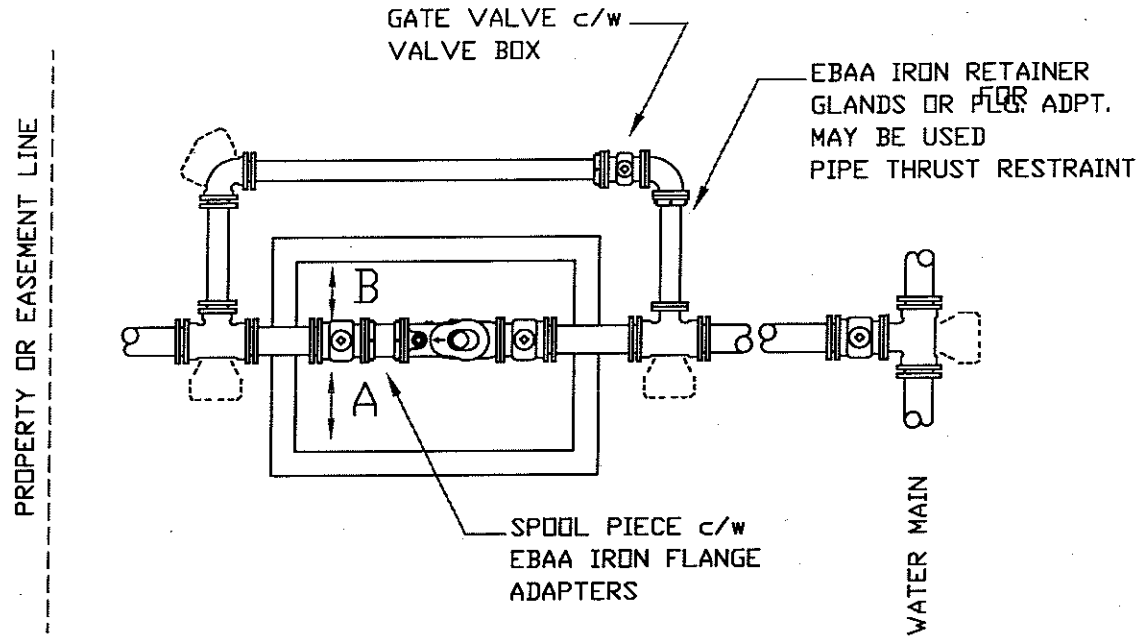

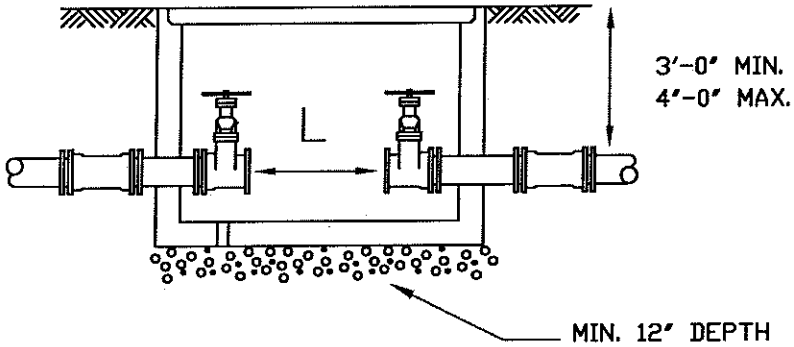

SERVICE SIZE	COMP. METER SIZE	MIN. BY-PASS SIZE	MIN. CLEARANCE L	A	B	HEIGHT FROM FLOOR TO ℄ PIPE
4" - 8"	3"	3"	25"	18"	12"	17" MIN/ 24" MAX
4" - 8"	4"	3"	28"	18"	12"	17" MIN/ 24" MAX
6" - 8"	6"	4"	32"	18"	12"	19" MIN/ 24" MAX
8"	8"	6"	SEE NOTE	18"	12"	20" MIN/ 24" MAX

NOTES: 1) The dimensions for meter and spool length (L) are based on SENSUS (ROCKWELL) compound meters. For 8-inch meter size consult Town on meter make and size.
2) Vaults shall be UTILITY VAULT CO. Style 575 LA or Town approved equal

Date: Dec. 08	Scale: N.T.S.	TOWN OF COUPEVILLE STANDARD PLAN	Plan #
By: GEORGE BRATTON, P.E. CIVIL ENGINEER		COMPOUND METER DETAILS	W-15

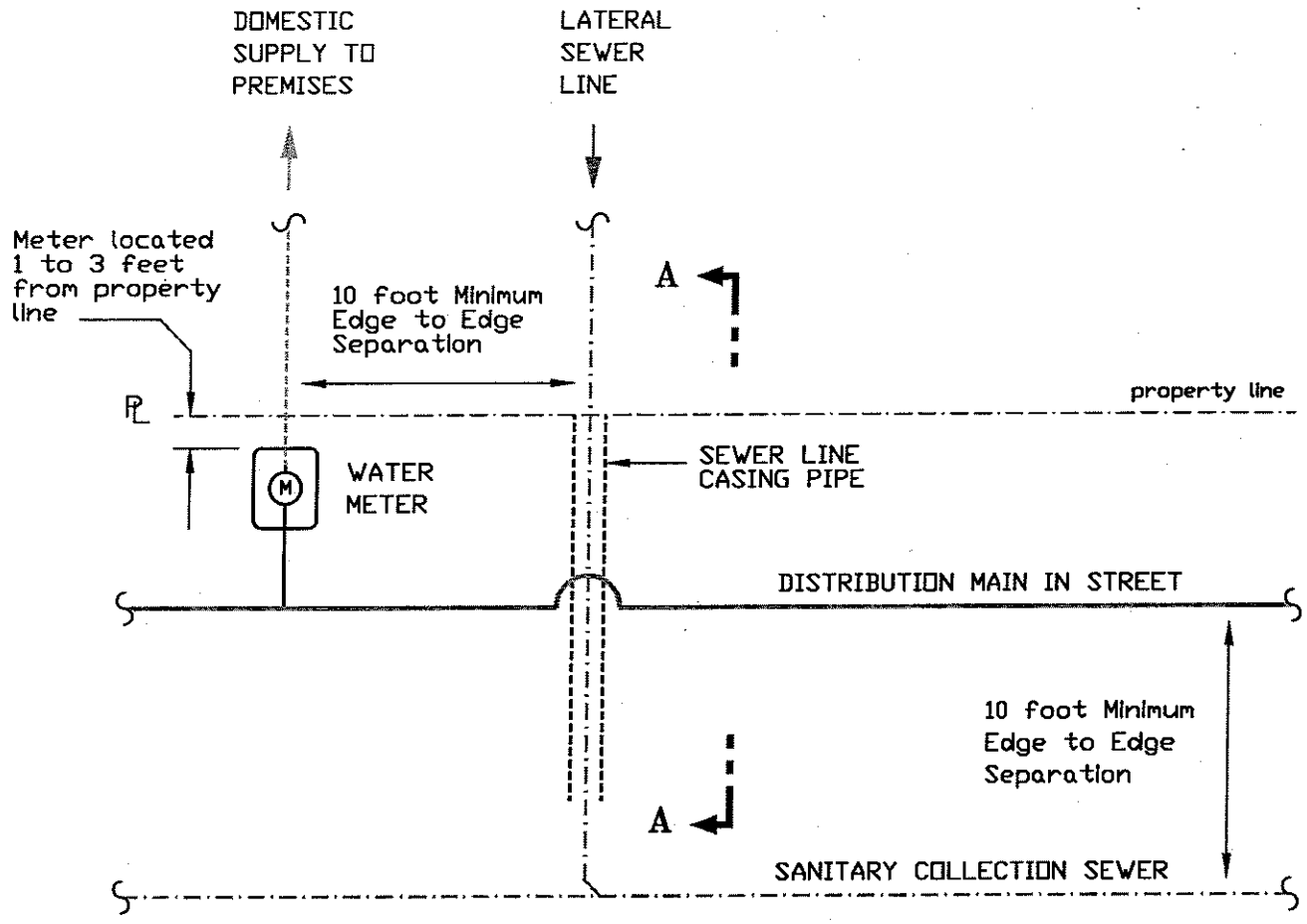

Notes:

GRAVITY SEWER LATERAL SHALL BE INSTALLED 18-INCHES BELOW WATER MAIN UNESS OTHERWISE APPROVED BY TOWN.

PRESSURE SEWER LATERAL AND PRESSURE COLLECTION SEWER SHALL BE INSTALLED IN DUCTILE IRON CASING PIPE 18-INCHES BELOW WATER MAIN.

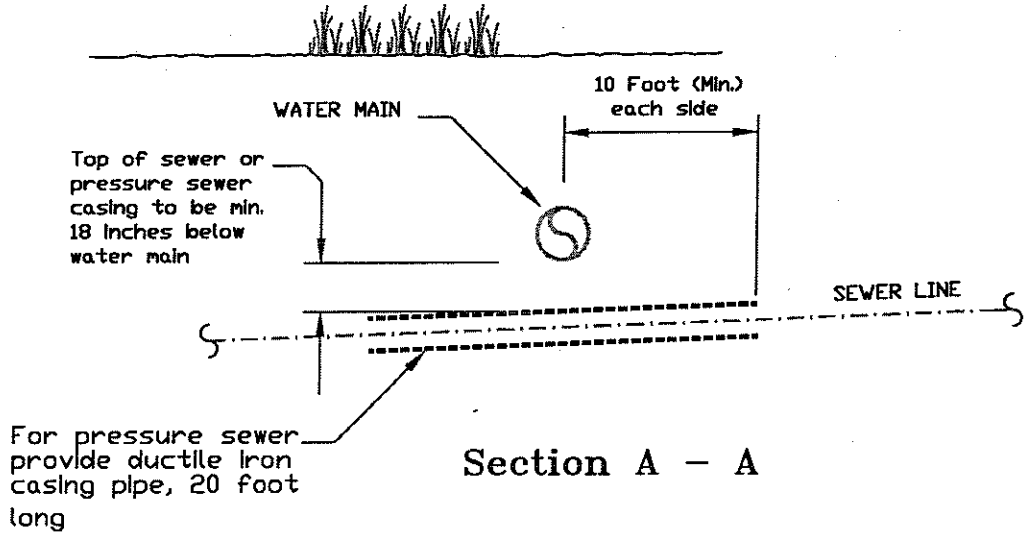

Section A – A

Date: Dec. 08	**Scale:** N.T.S.	TOWN OF COUPEVILLE STANDARD PLAN SEWER SEPARATION DETAILS	**Plan #** W-16
By: GEORGE BRATTON, P.E. CIVIL ENGINEER			

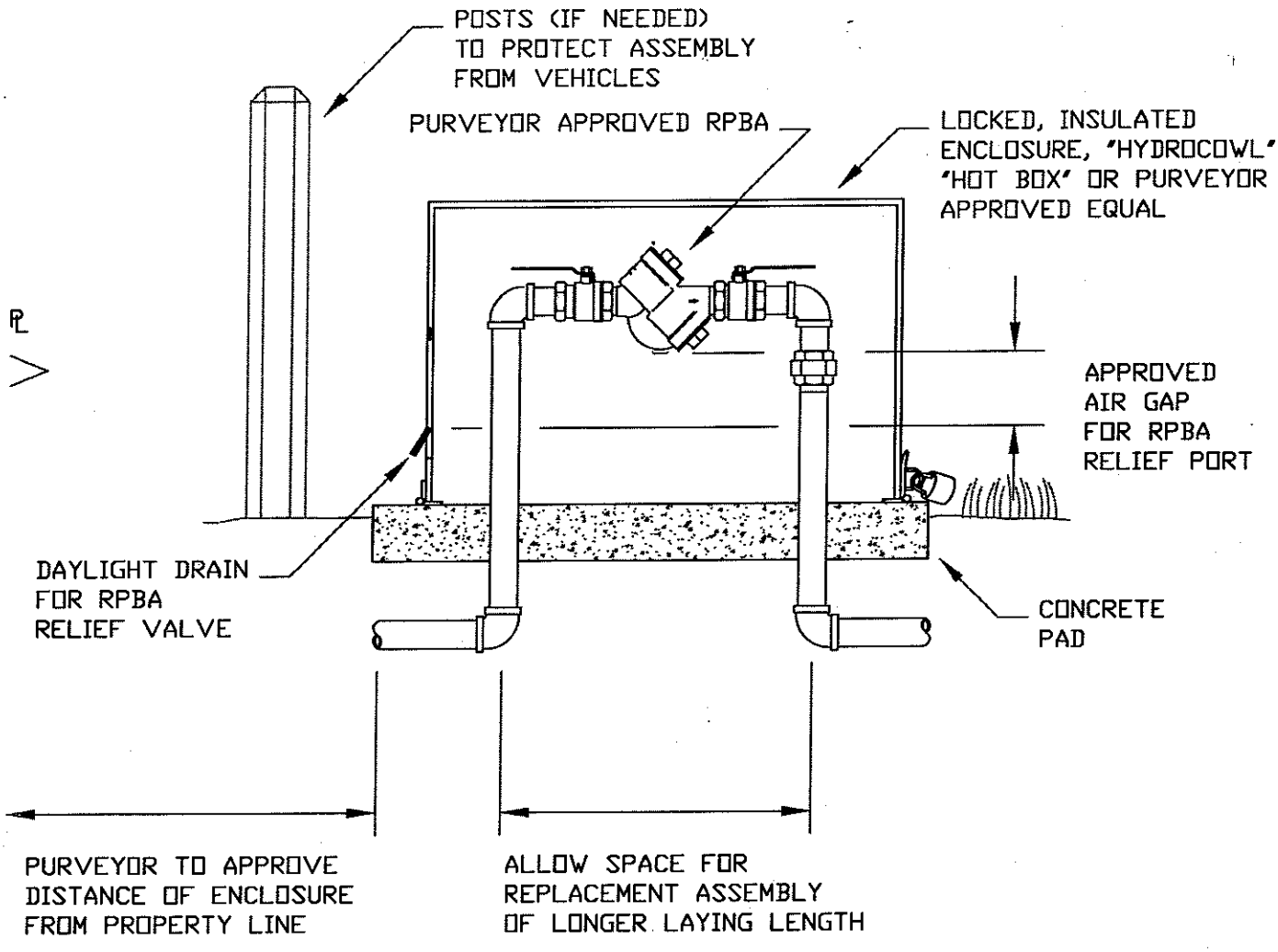

NOTES:

INSTALLATION TO COMPLY WITH:

- MANUFACTURER'S RECOMMENDATIONS, AND
- USC FCCCHR ASSEMBLY APPROVAL CONDITIONS, AND
- 6th EDITION OF PNWS-AWWA "CROSS CONNECTION CONTROL MANUAL"

IN ADDITION TO ENCLOSURE INSULATION,

- PROVIDE CLOSED CELL PIPE INSULATION, AND
- WRAP RPBA WITH FIBERGLASS PIPE WRAP, AND
- INSTALL COMBRACO 40-PFV FREEZE PROTECTION VALVE 34° F THERMAL ACTUATOR ON DOWNSTREAM TEST COCK.

OWNER MAY ALSO PROVIDE ELECTRIC HEAT IN ENCLOSURE OR HEAT TRACE WIRE.

Date: Dec. 08	**Scale:** N.T.S.	TOWN OF COUPEVILLE STANDARD PLAN 0.75" & 1" RPBA DETAILS	**Plan #** W-17
By: GEORGE BRATTON, P.E. CIVIL ENGINEER			

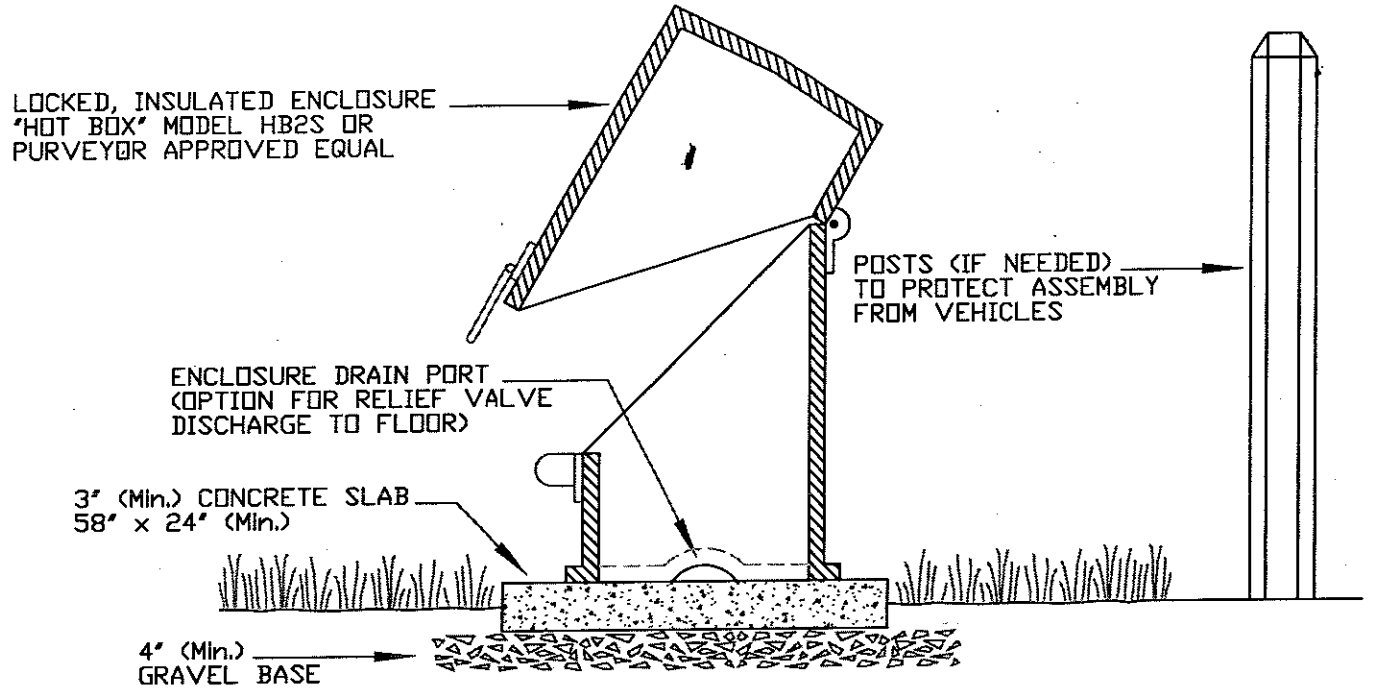

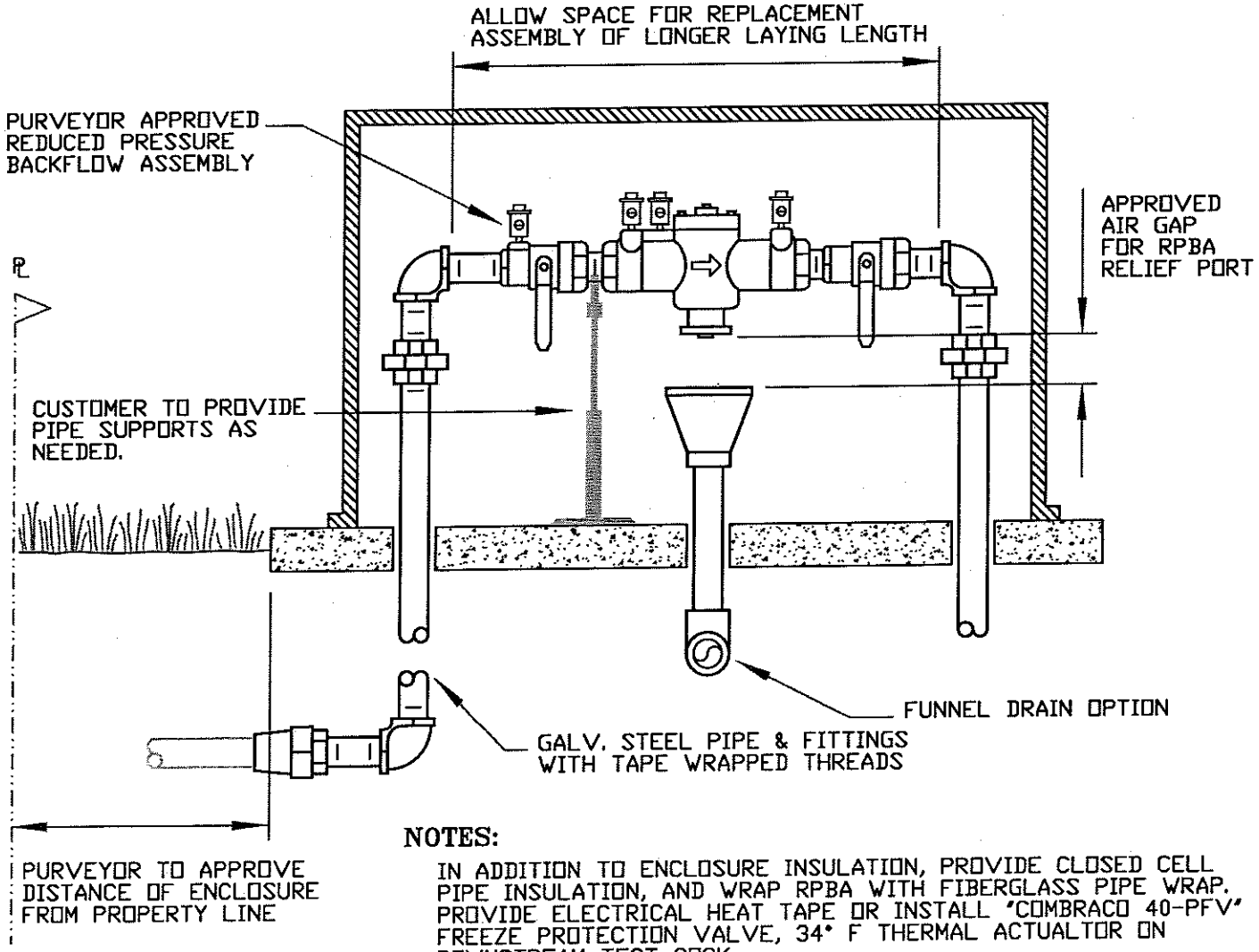

NOTES:

IN ADDITION TO ENCLOSURE INSULATION, PROVIDE CLOSED CELL PIPE INSULATION, AND WRAP RPBA WITH FIBERGLASS PIPE WRAP. PROVIDE ELECTRICAL HEAT TAPE OR INSTALL "COMBRACO 40-PFV" FREEZE PROTECTION VALVE, 34° F THERMAL ACTUALTOR ON DOWNSTREAM TEST COCK.

Date: Dec. 08	**Scale:** N.T.S.	**TOWN OF COUPEVILLE** **STANDARD PLAN** 1.5" & 2" RPBA DETAILS	**Plan #** **W-18**
By: GEORGE BRATTON, P.E. CIVIL ENGINEER			

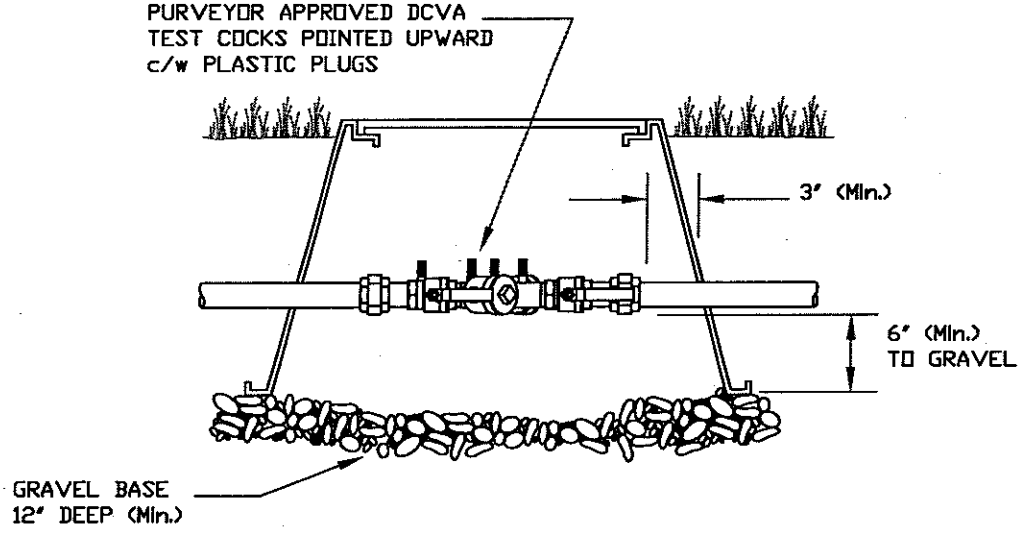

SERVICE ISOLATION / LAWN IRRIGATION
METER BOX ENCLOSURE INSTALLATION
DOUBLE CHECK VALVE ASSEMBLY

N.T.S.

Note:

All installations to comply with assembly manufacturer's recommendations, AND the USC FCCCHR Assembly Approval, AND the 6th Edition of the PNWS-AWWA 'CROSS CONNECTION CONTROL MANUAL', whichever more stringent.

Double check valve assembly may be installed in above-ground "Hot Box"

Date: Dec. 08	**Scale:** N.T.S.	TOWN OF COUPEVILLE STANDARD PLAN 0.75" & 1" DCVA DETAILS	Plan # W-19
By: GEORGE BRATTON, P.E. CIVIL ENGINEER			

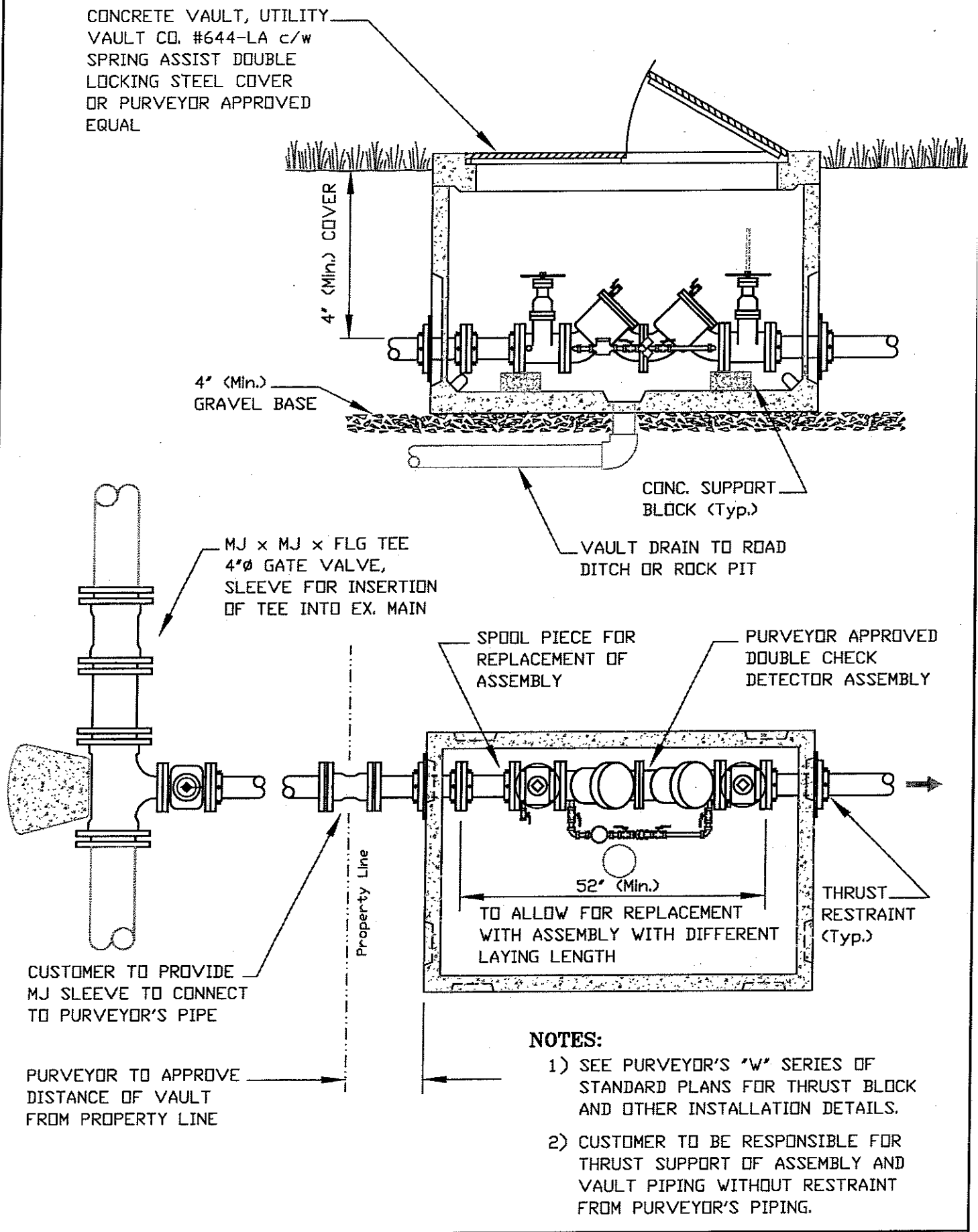

NOTES:

1) SEE PURVEYOR'S "W" SERIES OF STANDARD PLANS FOR THRUST BLOCK AND OTHER INSTALLATION DETAILS.

2) CUSTOMER TO BE RESPONSIBLE FOR THRUST SUPPORT OF ASSEMBLY AND VAULT PIPING WITHOUT RESTRAINT FROM PURVEYOR'S PIPING.

Date: Dec. 08	**Scale:** N.T.S.	**TOWN OF COUPEVILLE** **STANDARD PLAN** FIRE LINE DCDA DETAILS	**Plan #** **W-20**
By: GEORGE BRATTON, P.E. CIVIL ENGINEER			

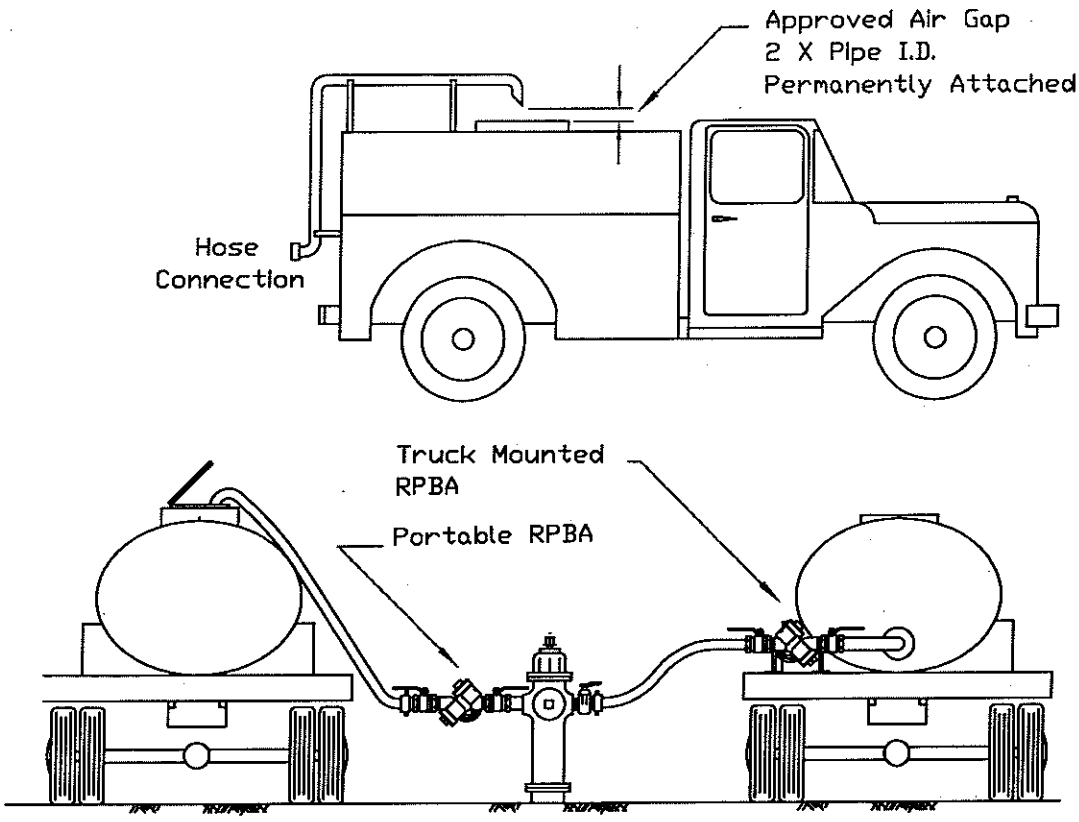

Water Tanker Trucks

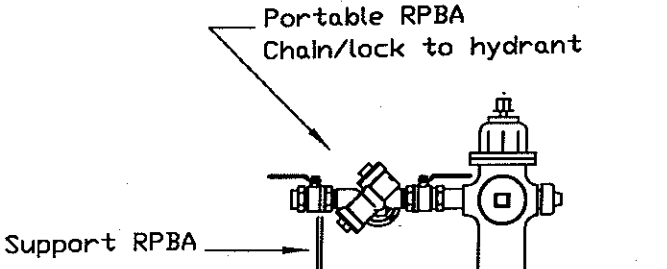

NOTES:

Construction water is not allowed for sewer related work; all water to be supplied by water tank trucks (see above).

RPBA to be tested by BAT before installation, when moved, or every two months (minimum).

Hydrant to be full open to ensure drain port is closed tight.

RPBA to be Purveyor approved.

Construction hydrant meter may also be required.

Construction Work on Street R-O-W

Date: Dec. 08	**Scale:** N.T.S.	TOWN OF COUPEVILLE STANDARD PLAN HYDRANT RPBA DETAILS	**Plan #** W-21
By: GEORGE BRATTON, P.E. CIVIL ENGINEER			

BACKFLOW PREVENTER REQUIRED FOR PREMISES (SERVICE) ISOLATION

COMMERCIAL CUSTOMERS
CATEGORY OF PREMISES INCLUDES ALL CUSTOMERS OTHER THAN SINGLE-FAMILY AND DUPLEX RESIDENCES.

Category of Customer / Water Use	Assembly
AGRICULTURAL (FARMS AND DAIRIES)	RPBA
BEVERAGE BOTTLING PLANTS, BREWERIES	RPBA
CAR WASHES	RPBA
CHEMICAL PLANTS	RPBA
LAUNDRIES AND DRY CLEANERS	RPBA
PREMISES WHERE BOTH RECLAIMED WATER & POTABLE WATER ARE PROVIDED	RPBA
FILM PROCESSING FACILITIES	RPBA
FOOD PROCESSING PLANTS, CANNERIES, SLAUGHTER HOUSES, RENDERING PLANTS	RPBA
HOSPITALS, MEDICAL CENTERS, NURSING HOMES, VETERINARY, MEDICAL AND DENTAL CLINICS, AND BLOOD PLASMA CENTERS	RPBA
IRRIGATION SYSTEMS WITH CHEMICAL ADDITION	RPBA
LABORATORIES	RPBA
METAL PLATING INDUSTRIES	RPBA
MORTUARIES	RPBA
PETROLEUM PROCESSING OR STORAGE PLANTS	RPBA
PIERS AND DOCKS	RPBA
WASTEWATER OR STORMWATER PUMPING STATIONS, WASTEWATER TREATMENT PLANTS	RPBA + AG
PREMISES WITH AN AUXILIARY WATER SUPPLY (CONNECTED OR UNCONNECTED)	RPBA
PREMISES WITH COMPLEX PIPING AND/OR PIPING POTENTIALLY SUBJECT TO CHANGE	RPBA
FIRE SPRINKLER SYSTEMS OR DEDICATED FIRE LINES WITH CHEMICAL ADDITION	RPDA
FIRE SPRINKLER SYSTEMS OR DEDICATED FIRE LINES WITHOUT CHEMICAL ADDITION	DCDA
ALL COMMERCIAL CUSTOMERS WITH FOOD PREPARATION (e.g. Cafe)	RPBA
ALL OTHER COMMERCIAL SERVICES	DCVA

RESIDENTIAL CUSTOMERS
CATEGORY OF PREMISES INCLUDES SINGLE-FAMILY AND DUPLEX RESIDENCES.

Category of Water Use Includes	Assembly
UNDERGROUND LAWN SPRINKLER SYSTEM	DCVA
SOLAR HEATING SYSTEM	DCVA
FIRE SPRINKLER SYSTEM OTHER THAN FLOW-THROUGH TYPE	DCVA
PRIVATE WELL (CONNECTED OR NOT CONNECTED TO PLUMBING)	RPBA
GRAY WATER SYSTEM (CISTERNS) OR OTHER AUXILIARY SUPPLY	RPBA
LIVESTOCK WATERING, STORMWATER CISTERNS w/o PUMPS FOR IRRIGATION/LIVESTOCK	DCVA
WATER SUPPLY TO DOCK OR SMALL BOAT MOORAGE, SUBMERGED WATER LINES	RPBA
GRINDER PUMP (SEWAGE PUMPED TO OFF-SITE SEPTIC OR SEWER)	RPBA
WATER SOFTENER OR REVERSE OSMOSES TREATMENT SYSTEM	DCVA + AG

Abbrev.:
- AG — Approved Air Gap per Plumbing Code in addition to RPBA/DCVA
- RPBA — Reduced Pressure Backflow Assembly
- RPDA — Reduced Pressure Detector Assembly
- DCVA — Double Check Backflow Assembly
- DCDA — Double Check Detector Assembly
- DCV — Dual Check Valve device in purveyor's water meter setter.

Notes:
1) For explanation of premises categories see PNWS-AWWA "CROSS CONNECTION CONTROL MANUAL", 1995 or latest edition thereof.
2) All assemblies, except DCV, are to be located as shown in W-11 to W-15, unless otherwise permitted in Service Agreement.

Date: Dec. 08	Scale: N.T.S.	TOWN OF COUPEVILLE STANDARD PLAN	Plan #
By: GEORGE BRATTON, P.E. CIVIL ENGINEER		DCVA & RPBA APPLICATION DETAILS	W-22

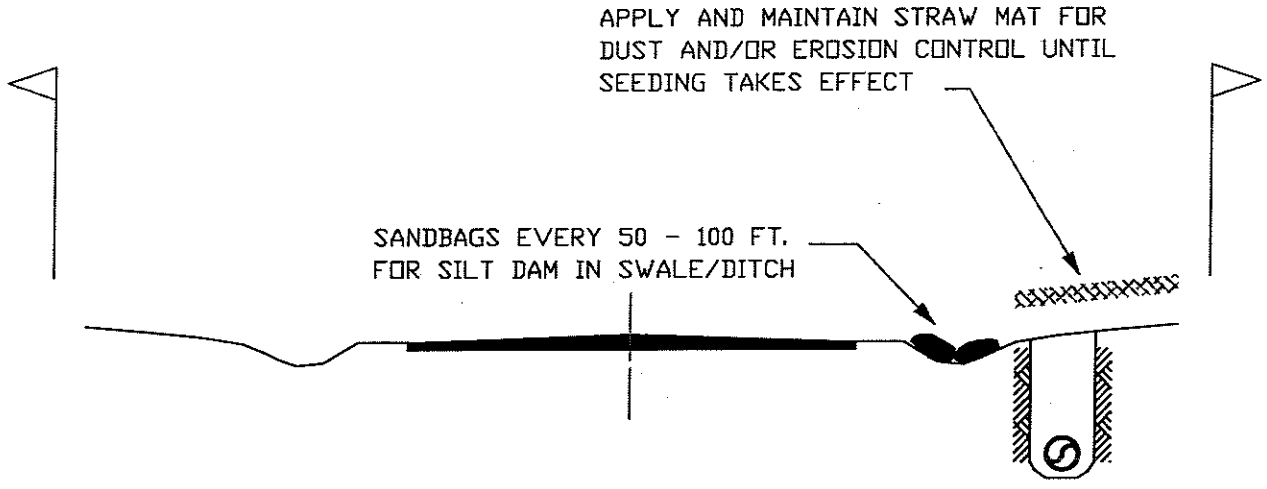

N.T.S.

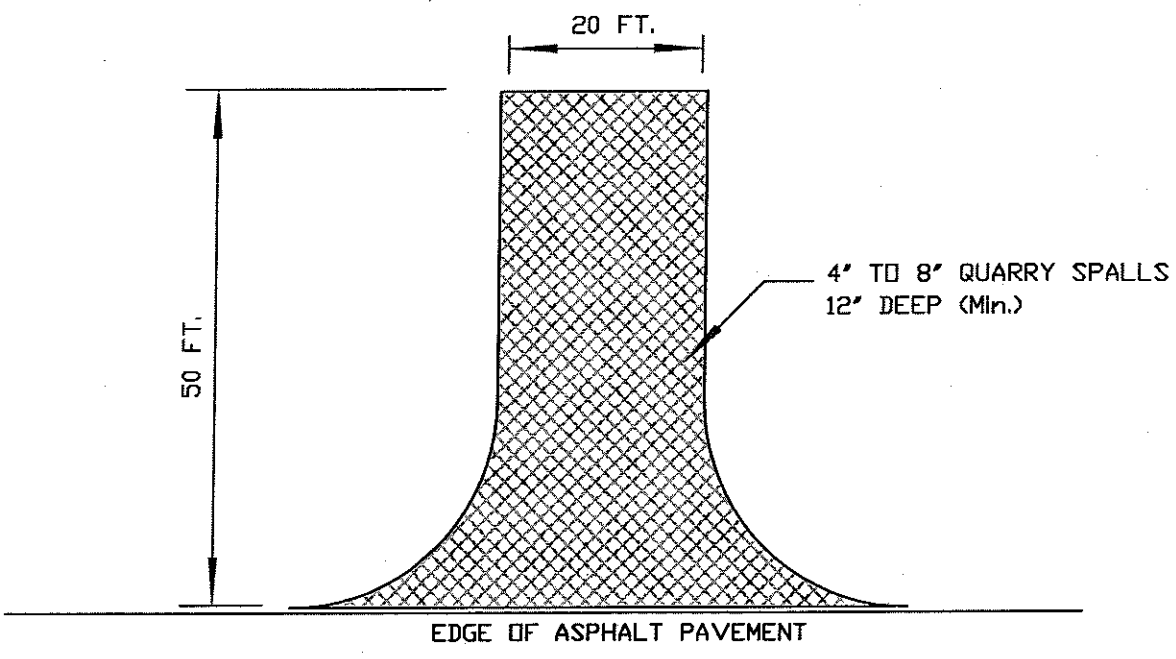

GENERAL NOTES:

1) PROVIDE SANDBAGS IN SWALE/DITCH LINE FOR SILT DAM. IF NEEDED, PROVIDE STRAW BALES OR FILTER FABRIC FENCE TO PREVENT RUNOFF FROM BY-PASSING SILT DAMS.

PROVIDE SANDBAGS IN DITCH LINE ON OPPOSITE SIDE OF ROAD IF NEEDED, FOR CONTAINMENT OF EXCAVATION MATERIALS WASHED OFF STREET SURFACE.

2) AT END OF EACH WORKING DAY, COMPLETE TRENCH BACKFILLING AND SURFACE RESTORATION TO EXTENT POSSIBLE, LEAVING ONLY PIPE END, FITTINGS FOR BLOCKING, ETC., EXPOSED.

3) SWEEP STREETS AT END OF EACH WORK DAY.

Date: Dec. 08	**Scale:** N.T.S.	**TOWN OF COUPEVILLE** **STANDARD PLAN**	**Plan #**
By: GEORGE BRATTON, P.E. CIVIL ENGINEER		EROSION CONTROL - STREET R-O-W DETAILS	W-23

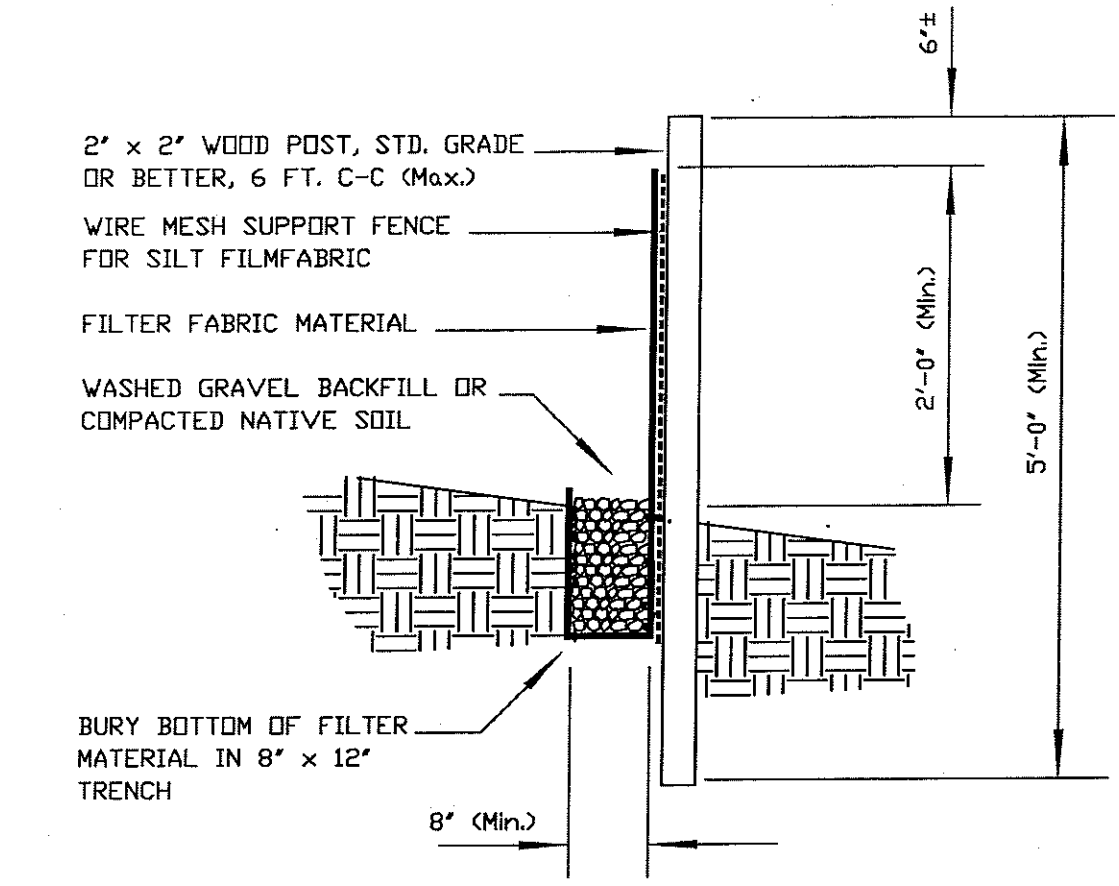

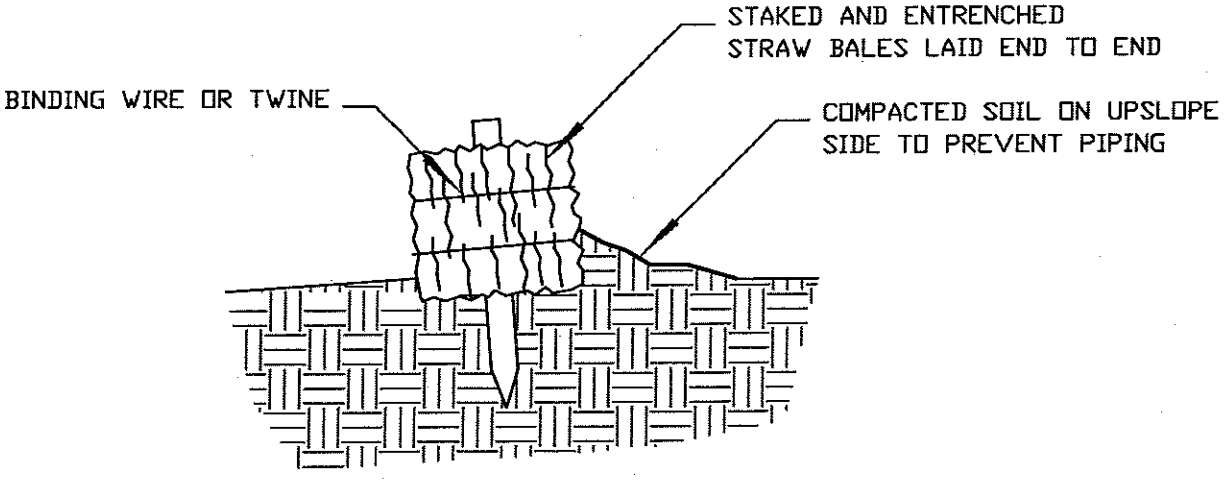

Date: Dec. 08	**Scale:** N.T.S.	**TOWN OF COUPEVILLE** **STANDARD PLAN**	**Plan #**
By: GEORGE BRATTON, P.E. CIVIL ENGINEER		EROSION CONTROL – FILTER FENCE & STRAW BALE DETAILS	W–24

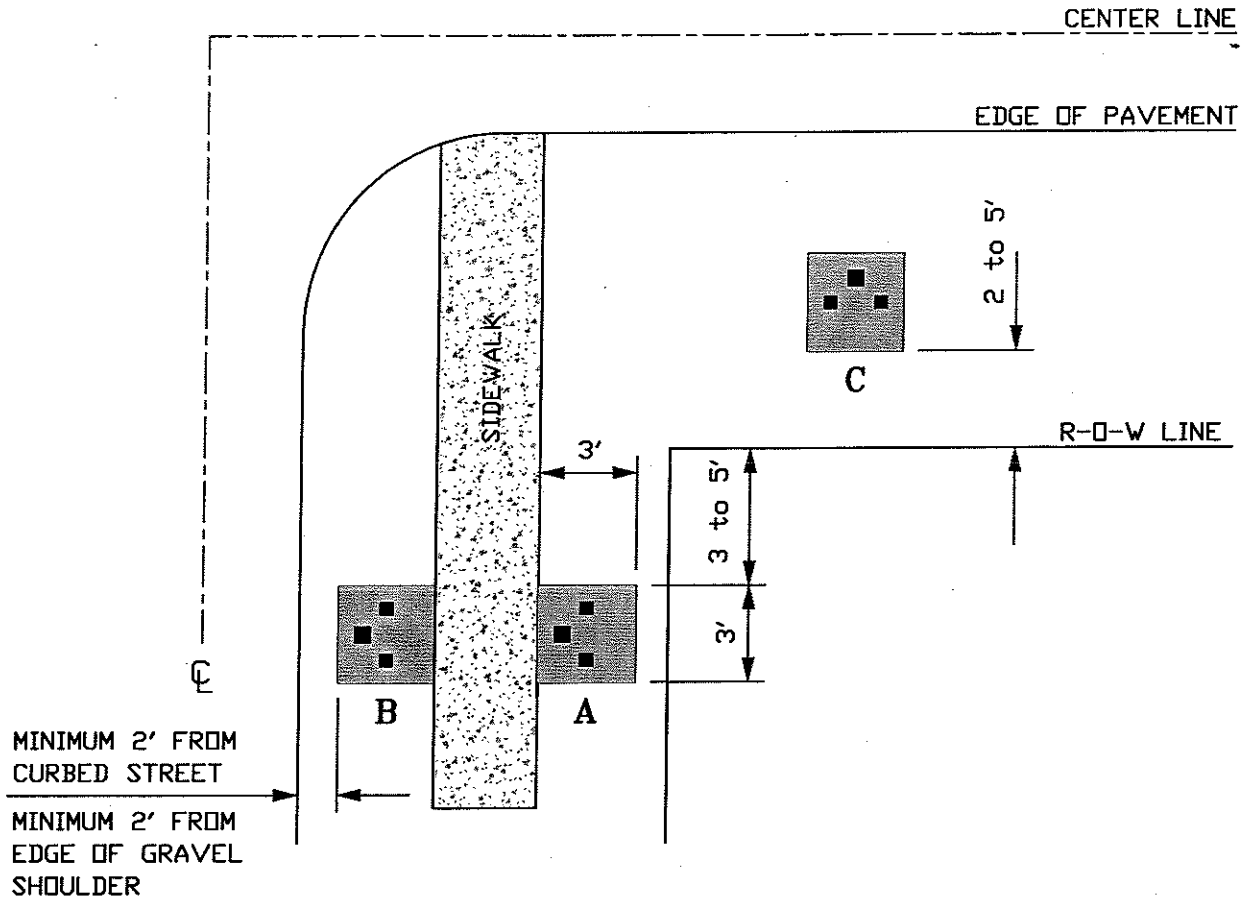

NOTES:

1) HYDRANT LOCATION TO BE SPECIFIED BY PUBLIC WORKS DIRECTOR.

2) MAXIMUM HYDRANT SPACING SHALL BE:

   OUT-OF-TOWN SERVICE AREA:
   a) LOW DENSITY AND AGRICULTURAL AREAS: MAXIMUM 900 FEET BETWEEN HYDRANTS.
   b) FOR ALL OTHER (HIGHER DENSITY) DEVELOPMENTS, AS REQUIRED BY THE COUNTY FOR SUBDIVISION OR DEVELOPMENT APPROVAL.

   WITHIN TOWN LIMITS (Chapter 16.24.050(5) of Town Code, Development Regulations):
   c) LOW DENSITY AND AGRICULTURAL AREAS: MAXIMUM 900 FEET BETWEEN HYDRANTS.
   d) RESIDENTIAL AREAS: MAXIMUM 600 FEET.
   e) COMMERCIAL / INDUSTRIAL AREAS: AS REQUIRED BY FIRE MARSHAL BUT NOT TO EXCEED 300 FEET (schools, courthouse, hospital and other larger public buildings to be considered as commercial).
   f) BUILDING OF WHICH ANY PORTION IS MORE THAN 150 FEET FROM THE PUBLIC WATER SUPPLY SHALL HAVE HYDRANTS LOCATED AS DIRECTED BY FIRE MARSHAL.

3) THE MAXIMUM HOSE LAY IN A LOW DENSITY AREA FROM A HYDRANT TO THE LAST CUSTOMER (e.g., for a cul-de-sac) SHALL BE 500 FEET.

Date: Dec. 08	**Scale:** N.T.S.	TOWN OF COUPEVILLE STANDARD PLAN UTILITY CONTROL DETAILS- HYDRANTS	**Plan #** W-25
By: GEORGE BRATTON, P.E. CIVIL ENGINEER			

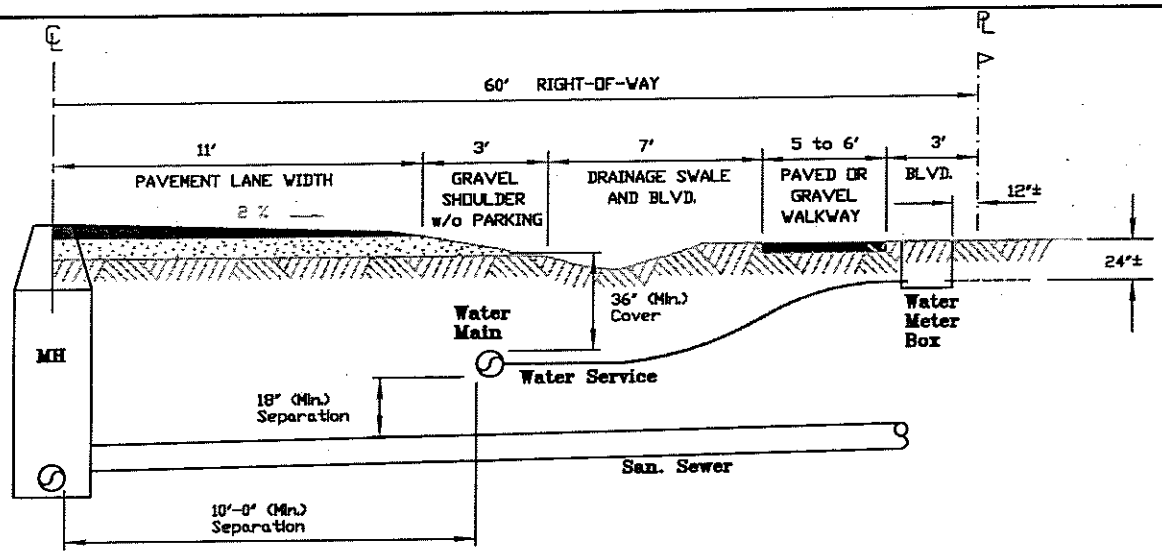

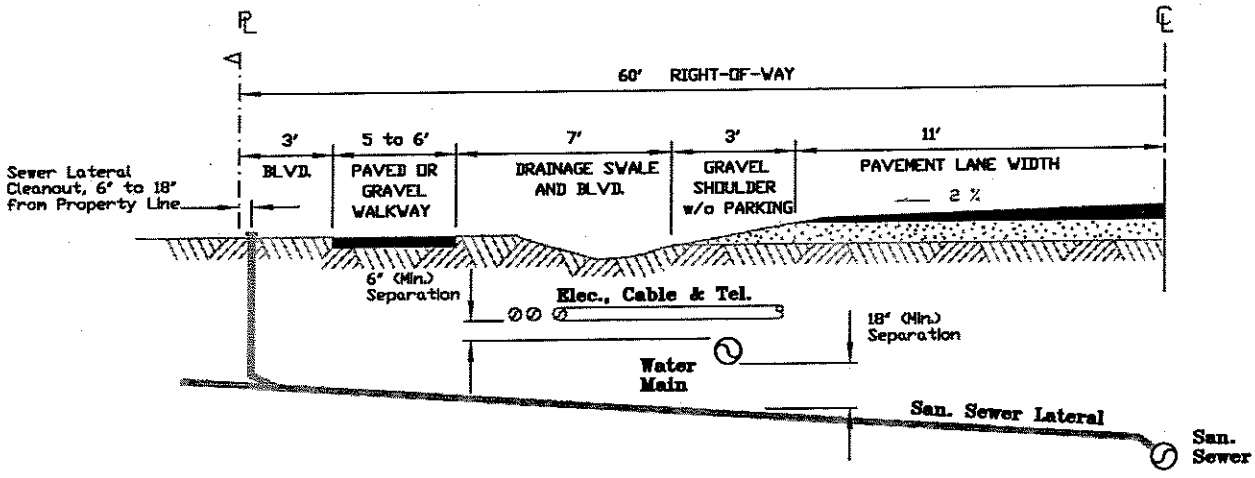

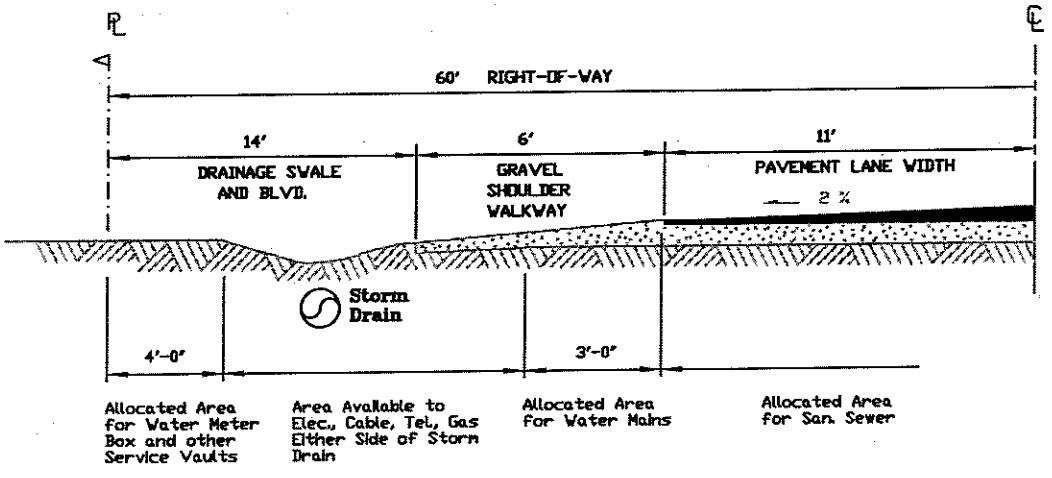

Residential Streets Utility Separation
New Subdivisions

Date: Dec. 08	**Scale:** N.T.S.	TOWN OF COUPEVILLE STANDARD PLAN UTILITY CONTROL DETAILS - STREET CROSS-SECTIONS	Plan # W-26
By: GEORGE BRATTON, P.E. CIVIL ENGINEER			

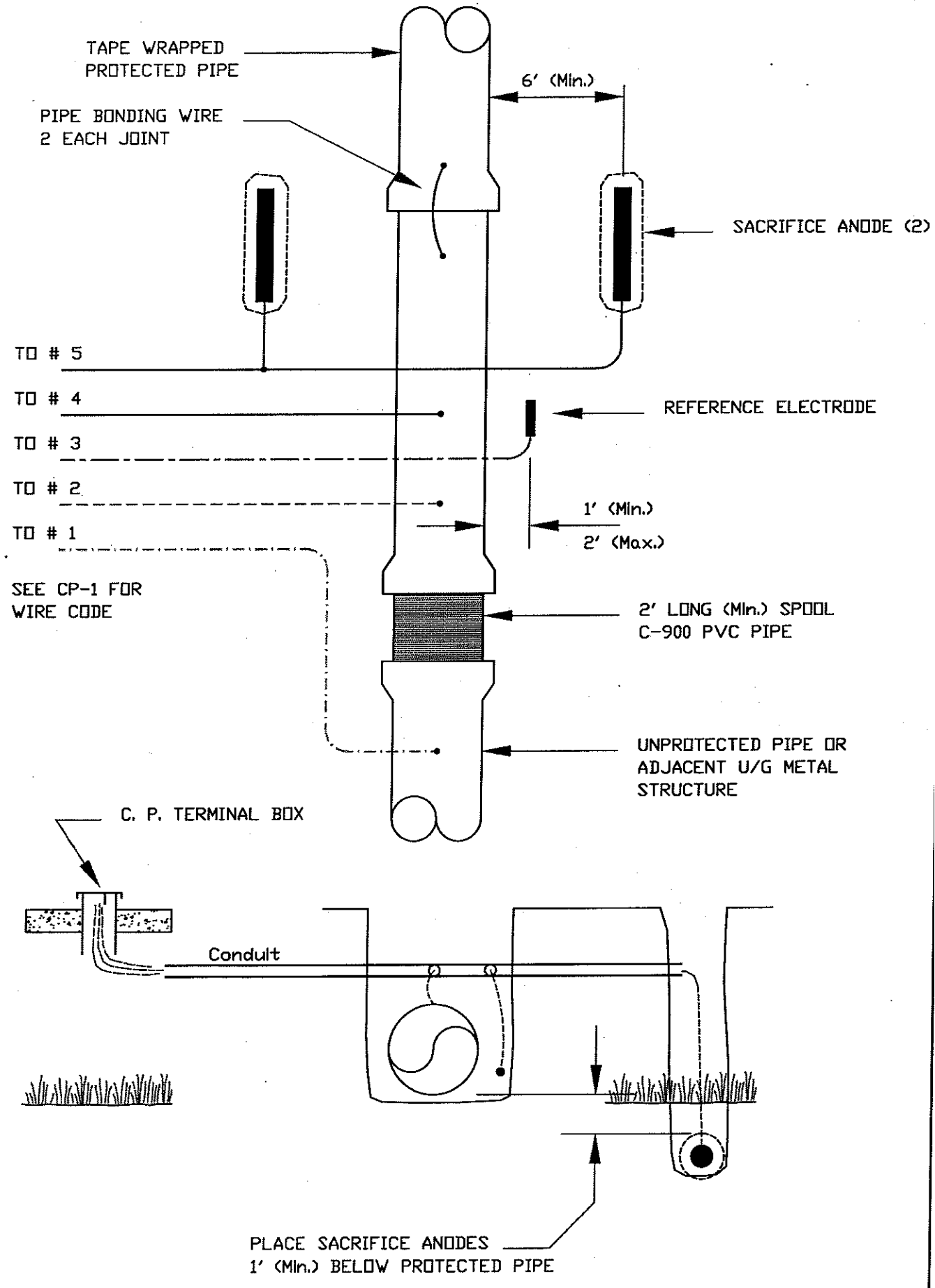

Date: Dec. 08	**Scale:** N.T.S.	TOWN OF COUPEVILLE STANDARD PLAN CATHODIC PROTECTION – ANODE PLACEMENT	**Plan #** W-27
By: GEORGE BRATTON, P.E. CIVIL ENGINEER			

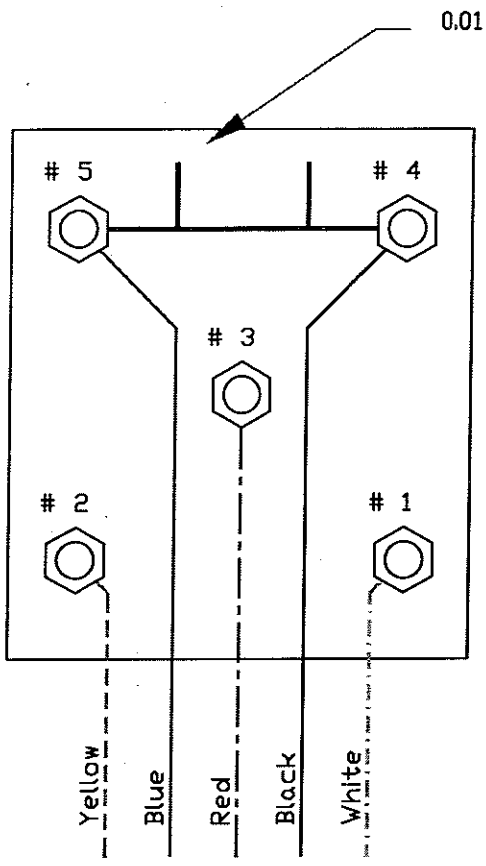

SACRIFICE ANODE	BLUE	TERMINAL # 5
PROTECTED PIPE	BLACK	TERMINAL # 4
REFERENCE ANODE	RED	TERMINAL # 3
PROTECTED PIPE	YELLOW	TERMINAL # 2
FOREIGN STRUCTURE	WHITE	TERMINAL # 1

WIRE COLOR & TERMINAL CODE

NOTES:

1) TERMINAL # 2 SHALL BE USED FOR OVER-THE-LINE POTENTIAL SURVEYS (CuSO4 electrode)

2) WIRE COLOR CODE APPLIES TO FIRST 5 FEET FROM TERMINAL

TEST POINT TERMINAL BOX

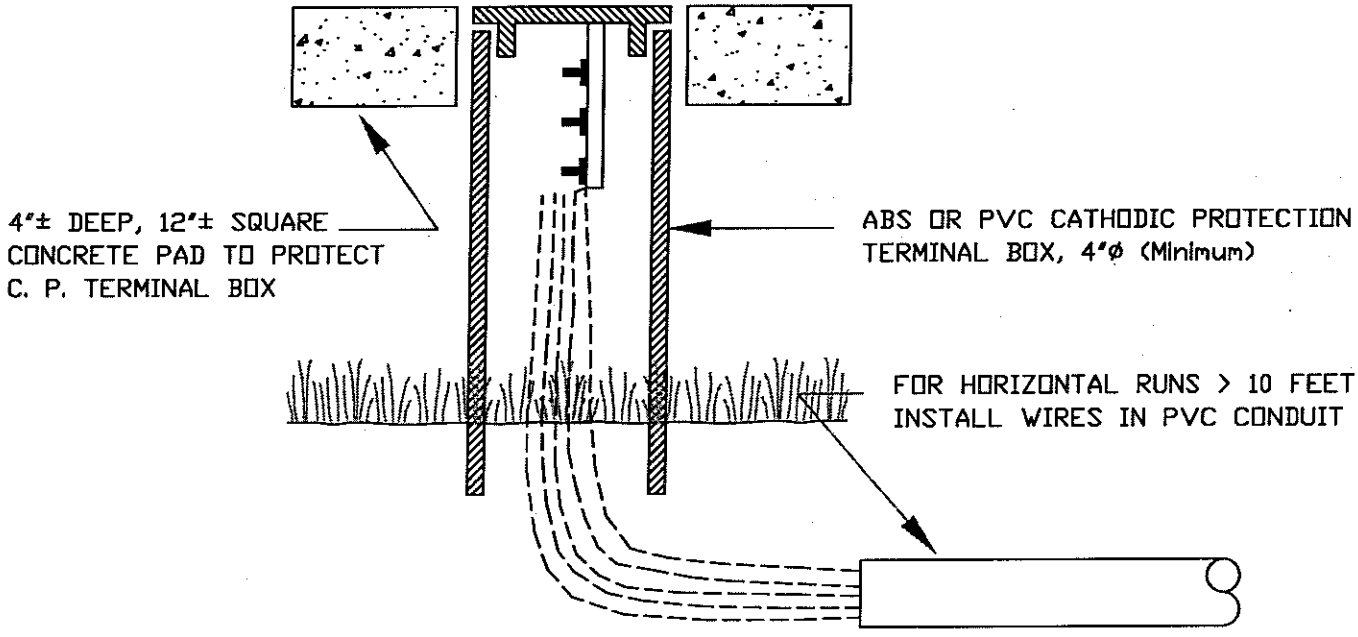

Date: Dec. 08	**Scale:** N.T.S.	TOWN OF COUPEVILLE STANDARD PLAN CATHODIC PROTECTION – TEST POINTS	**Plan #** W-28
By: GEORGE BRATTON, P.E. CIVIL ENGINEER			

Appendix M

Water Conservation Plan
(with Water Use Efficiency Measures)

WATER CONSERVATION PLAN

This plan is divided into two parts. Part 1 is the initial plan first included in the 1997 *Water System Plan*. Part 2 includes additional information pertaining to compliance with the *Water Use Efficiency Rule*.

Part 1 – Initial Plan

A. IMPLEMENTATION:

The following water conservation plan is incorporated into the Town's system design, operation and management.

Additional long-term water conservation measures may be required in the future. Such requirements could be adopted based on the ***Water Use Efficiency Guidebook***, Second Edition, 2009.

For short-term water conservation measures needed to respond to drought conditions, system operation problems, etc., refer to the ***Water Shortage Response Plan*** in Appendix M.

B. COMPONENTS OF THE PLAN:

Water Metering:

The system is metered at all of the well sources and the treatment facilities. The Town Ordinance requires each service connection to be metered, including water connections to community areas.

All water withdrawn from fire hydrants for water main cleaning, construction, etc., shall be metered through a SENSUS Model 125 Fire Hydrant Meter, or equal. An estimate is made of the water used by the fire department for fire suppression training.

Water Rate Structure:

In 1991, to promote water conservation, the Town adopted a water rate structure that incorporates a 50 percent summer surcharge (seasonal rate, June July, August and September).

Water Audit:

At each billing period, a comparison shall be made between the source (master) meter and the sum of the customer's water consumption (billings) plus fire hydrant meter readings.

Should the distribution system leakage (DSL) [1] water exceed 9 percent of the source production, a cursory water audit should be performed to determine if the difference is due to an unusual occurrence, such as water use for fire fighting, water main break, difference between customer and source meter reading dates, etc.. If the DSL water exceeds 9 percent for two or more billing periods, the water audit should be extended to include a check of meter calibration, and a leak detection survey. If the water loss cannot be determined by the cursory water audit, a full audit should be conducted as outlined in the American Water Works Association publication, Water Resources Audit, 1988.

Until most of the residential meters are tested and, where necessary, replaced for inaccuracy, the above water audit procedure should include an adjustment for the average difference between customer and source meters to reflect the present under recording by residential meters.

To permit the customers to assess individual water use, the water bills will show consumption history. Any abnormal increase in a customer's monthly consumption should initiate an inquiry by the customer into a possible leak in the customer's plumbing system. Any major ongoing decrease should initiate the need to check on the accuracy of the water meter.

To facilitate the water audit procedures, all meters will be tested or replaced at the interval recommended by the American Water Works Association, e.g., Standards C-700 Cold Water Meters - Displacement Type, and C-701 Cold Water Meters - Turbine Type. The source meters should be tested for accuracy at a minimum interval of one year, the commercial meters at a minimum interval of four years, and the residential meters at a minimum interval of eight years. For commercial customers having a high water consumption, such as the County offices, State Park, etc., meters should be tested at a more frequent interval than recommended by A.W.W.A The preferable interval is one year.

Conservation:

The Town has adopted by ordinance or resolution the following conservation measures, ranked in order by degree of restriction on water use.

1. Establishing in Town Ordinance 475, the policy of promoting water use conservation.

2. Continuation of public education concerning water conservation methods and goals, The Water Advisory Committee shall provide advise as needed for implementation to council.

3. Issuing a public call for voluntary conservation of water.

4. Establishment of a system for odd and even day lawn sprinkling and car washing. This may be reduced to watering once per week.

[1] Distribution system leakage was previously referred to as "unaccounted-for water".

5. Issuing and enforcing a complete ban on lawn sprinkling and car washing.

6. Provision for temporary bypassing of the water treatment plants to conserve the water normally discarded to waste.

7. Setting up temporary premium rates for above-normal water usage.

8. Issuance of mandatory water use reduction with penalties for noncompliance.

The Town's water conservation program consists of measures 1, 2 and 3 above. The remaining items are considered part of the Town's ***Water Shortage Response Plan*** in Appendix M.

In addition to the above water conservation measures, the Town:

a. Restricted irrigation of the community areas to new landscaping, and minimum application to preserve the planted areas. Landscaping will be chosen for low maintenance (e.g., water consumption).

b. Enforces the Plumbing Code requirements for water conservation fixtures found in Chapter 51-18 of the Washington Administrative Code and Chapter 19.27.170 of the Revised Code of Washington.

c. Completed a two-year program to encourage the installation of water saving toilets. The program provided credit to the water bill of new customer's (before July 1, 1993) of $100, and a rebate to existing customers that retrofit of $100. The program resulted in the replacement of 273 toilets.

Part 2 – Water Use Efficiency Rule

A. GENERAL:

The 2003 Municipal Water Law and subsequent additions thereto impose on all Group A public water systems that are government owned (e.g., Cities, Towns, Water Districts) the following requirements:

1 A "duty to serve" all customers within its service area.

2 Begin to collect water production and consumption data by January 2008.

3 Set water use efficiency goals though a public meeting process by January 2009.

4 Submit to WA DOH service meter installation schedule buy July 2009.

5 Meet distribution leakage standard of 10 percent or less of DSL water by July 2011.

6 Set water use efficiency measures (the number depends on the size of the system).

7 Submit annually to WA DOH (first report in July 2009) an annual *Water Use Efficiency Performance Report Form.*

8 Complete installation of service meters to all customers by January 2017.

9 Install service meters on all new customers (effective January 2007).

10 Install source meters (at each well) on all existing and new sources (effective January 2007).

Item "1" was recognized by the Town in the previous water system plans. The Island County *Coordinated Water System Plan* already imposed the duty to service customers in the service area approved by the County.

The Town now collects water consumption and use data (Item 2) for estimating future water supply and demand.

The adoption of water use efficiency measures is discussed in the following section.

All sources are now metered. All water services are metered.

The current DSL water (distribution leakage) is less than 10 percent.

B. WATER USE EFFICIENCY MEASURES:

Water use efficiency measures shall be evaluated of implemented, based on the Purveyor's number of service connections, as noted in the following table from the WA DOH publication ***Water Use Efficiency Guidebook***, Second Edition, 2009.

Number of Connections	Less than 500	500 to 999	1,000 to 2,499	2,500 to 9,999
Water Use Efficiency Measures	1	4	5	6

The following conservation measures were considered and/or implemented. Where a conservation measure was considered but not implemented, an explanation is provided of why the measure was not adopted (e.g., cost-effectiveness). The following table shows the measure(s) considered (denoted by letter "C" in the right-hand column) but not implemented, and measure(s) implemented (denoted by letter "I").

1	Residential service meters	I
2	Water conservation rate structure (inclining rate)	I
3	Water bill showing consumption history	I
4	Public education – water conservation brochures mailed to customers	I
5	Public education – speakers / information display at public meeting(s)	I
6	Public education – low flow water use landscaping	I
7	Residential toilet retrofit program (low water use units)	I
8	Residential showerhead replacement program (low water use units)	I
9	Commercial toilet, showerhead, clothes washer/dishwasher replacement	I
10	Water reuse – water treatment plant effluent for residential irrigation	
11	Water reuse – storm water collection for residential irrigation	
12	Water reuse – water treatment plant effluent for commercial irrigation	C
13	Water reuse – storm water collection for commercial irrigation	C
14	Water reuse – WTP effluent or storm water for aquifer recharge	C

Commercial customers are considered as all customer classes other than single-family and duplex residential units.

The above noted implemented measures were discussed and adopted in a Town Council Meeting. The Town Council meeting to discuss and adopted the 2009 Water System Plan included public notification of the meeting, the inclusion in the meeting agenda of setting water conservation goals, and the reaffirmation of the goals previous established in the water system plans.

Appendix U includes the estimate of water savings by adoption of the water use efficiency measures.

The measures considered but not adopted (items 12, 13 and 14) were evaluated in the 2009 report ***Reclaimed Water Feasibility Report*** by BHC Consultants for the Town of Coupeville. Funding for these measures is not available from the Town's six year sewer and/or water capital plans.

C. WATER SUPPLY CHARACTERISTICS

The water supply characteristics are described in the Water System Plan text and Appendices. The following is a summary of the pertinent information to the Water Use Efficiency Rule.

The Town presently obtains water from two groundwater fields denoted as the In-Town well field and the Fort Casey well field. Both well fields are in the Central Whidbey water resource area (WRIA 6).

The In-Town well field, comprising of operating Well Nos. 1, 4, and 7, withdraws water from USGS designated Aquifer 'C'. In-Town Well No. 6 withdraws water from USGS designated Aquifer 'A'. The Fort Casey well field also withdraws water from USGS designated Aquifer 'C'. The locations of the Town's wells are shown in the drawings in the Water System Plan.

The following is a summary of the production capacity of the operating wells:

	Operation Status	Year Drilled	Diameter (inches)	Depth (feet)	Pump (hp)	Production (gpm)
IN-TOWN						
Well No. 1	Emergency	1928	12	190	15	160
Well No. 4	Operating	1967	8	206	30	210
Well No. 6	Emergency	1994	8	520	30	200
Well No. 7	Operating	2000	8	270	30	210
FT. CASEY						
Well No. 1-87	Operating	1987	6	66	2	14
Well No. 2-87	Operating	1987	6	90	3	27
Well No. 3-87	Operating	1987	6	69	2	10
Well No. 4-87	Operating	1987	6	93	5	21
Well No. 1-90	Operating	1990	8	238	5	40
Well No. 1-06	Operating	2006	8	203	7.5	45
Well No. 1-08	Unconnected	2008	12 (8)	200	NA	250

The following is a summary of the Town's water rights:

Water Rights

WA DOE file #	Certif. #	Priority Date	Qf (gpm)	Qi (afy)
G1-00845SWRIS	880-D	1/1/1928	250	26
G1-01397CWRIS	1174	3/3/1950	150	42
G1-08242CWRIS	5618	8/11/1966	150	240
G1-20359CWRIS	G1-20359C	11/20/1972	210	190
G1-20378CWRIS	G1-20378C	11/20/1972	210	190
		Total:	970	606

The above water rights were changed in 2008 to allow withdrawal from within the following area of Central Whidbey Island:

> Sections 2, 11, 12, 13 and 14 of Township 31 North, Range 1 East, W.M.
> Section 33 of Township 32 North, Range 1 East, W.M.

The above area coincides with the location of the current In-Town wells (Section 33) and the Smith Prairie and Fort Casey location of the current and planned future locations of the Out-of-Town wells.

Appendix Y shows that the water rights are adequate to supply the ultimate number of customers in the Retail Water Service Area approved by Island County.

The production from the sources of supply vary primarily due to changes in well efficiency (specific capacity) due to a build up of calcium and iron deposits on well screen intakes and/or biofoulding by iron and sulfate reducing bacteria. Production is maintained by scheduled well rehabilitation by surging and acid treatment.

To date, no decrease in production has been observed due to variability in annual precipitation.

Due to the risk of seawater intrusion, the 2008 change in the water right place of withdrawal to include the area north of the Fort Casey well field (Smith Prairie) allows the Town to move its points of withdrawal to an area where the groundwater elevation is highest, thereby withdrawing its allocated water rights with low risk of seawater intrusion.

The preliminary evaluation by the Town's hydrogeologist shows that the estimated recharge in to the sea level aquifer north of the Fort Casey well field is adequate for the Town's water right annual withdrawal (AGI report dated May 6, 1996).

For all operating wells, the Town monitors static and pumping water levels monthly. Monthly records are also kept of rainfall. The Town will utilize this data to assess any long-term impact of variation in rainfall on well production.

Annual Water Use Efficiency Performance Report Form

You must submit this report by email.
Save the completed form with your water system's name and email it to WUE@doh.wa.gov by July 1.

Washington State Department of Health
Division of Environmental Health
Office of Drinking Water

General Water System Information:

System Name: Town of Coupeville Water System

System ID #: 155509

County: Island

Your Name: Malcolm Bishop

Your Title: Public Works Director

Your email address: mbishop@whidbey.net

Your Phone Number: (360) 678-4461 Enter without dashes. Example: 3601234567

Today's Date: 06/24/09 Enter as mm/dd/yy. Example: 01/01/09

Who should we contact if we have questions about this report?

Name: Malcolm Bishop

Phone Number: (360) 678-4461 Enter without dashes. Example: 3601234567

Meter Installation Information:

Is your water system fully metered? Yes **If Yes, continue to next page.**

If not fully metered:
Current status of meter installation:

Describe efforts to minimize leakage:

Production, Authorized Consumption, and Distribution System Leakage Information:

Reporting Year: 2008

12-Month WUE Reporting Period:

01/01/08 to 12/31/08 Enter as mm/dd/yy. Example: 07/01/08

Incomplete or missing data for the year? No

If yes, explain:

Distribution System Leakage Summary:	
Total Water Produced and Purchased (TP) – Annual Volume	91,701,165 gallons
Authorized Consumption (AC) – Annual Volume	90,652,496 gallons
Distribution System Leakage – Annual Volume **TP - AC**	1,048,669 gallons
Distribution System Leakage – Percent **DSL = [(TP - AC) / TP] x 100**	1.1 %

Goal Setting Information:

Date of Most Recent Public Forum: _____ Enter as mm/dd/yy. Example: 10/01/08

Goals must be established through a public process.

Has goal been changed since last annual WUE report?

Each goal must identify the measurable water savings that will be achieved at a specific time in the future. Identify all water saving goals established by elected governing board.

WUE Goals:

Supply Side Goal (if applicable):
Demand Side Goal (required):

☐ I don't have this information

Describe Progress in Reaching Goals:

- Estimate how much water you have saved.
- Report progress toward meeting goals within your established timeframe.
- Identify any WUE measures you are currently implementing.

Supply Side Goal Progress:
Demand Side Goal Progress:

Additional Information Regarding Supply and Demand Side WUE Efforts

- If you established a goal to maintain a historic level (such as maintaining daily consumption at 65 gallons per person per day), you must explain why you are unable to reduce water use below that level.
- Include any other information that describes how you and your customers use water efficiently.

The Town of Coupeville is developing its WUE goals as we are completing the Town's 2009 - 2015 Water System Plan. These goals are included in the Water System Plan.

Also included with this form is a copy of the 2008 tabulation of water not billed through the Town's normal billing process.

For more information, visit our Web at http://www.doh.wa.gov/ehp/dw/programs/wue.htm or contact a regional planner:

Eastern Regional Office—Spokane—Main Office: (509) 456-3115
Southwest Regional Office—Tumwater—Main Office: (360) 236-3030
Northwest Regional Office—Kent—Main Office: (253) 395-6750

The Department of Health is an equal opportunity agency. For persons with disabilities, this document is available on request in other formats. To submit a request, please call 1-800-525-0127 (TTY 1-800-833-6388).

CONSERVATION PLANNING REQUIREMENTS FOR PUBLIC WATER SYSTEMS WITH FEWER THAN 1,000 SERVICE CONNECTIONS LOCATED IN CRITICAL WATER SUPPLY SERVICE AREAS

FOR REFERENCE ONLY
(was part of 2003 Water System Plan)

The checklists below are for use by public water systems in their efforts to develop a water conservation plan in accordance with the Guidelines and Requirements for Public Water Systems regarding Water Use Reporting, Demand Forecasting Methodology, and Conservation Programs (Conservation Planning Requirements). These checklists will also be used by Ecology and Health staff in reviewing conservation plans required from public water systems. Conservation plans consist of three elements: data collection and reporting; demand forecasting for future water needs, and; conservation program development and implementation. THESE CHECKLISTS IDENTIFY THE REQUIREMENTS FOR EACH OF THESE THREE COMPONENTS OF A CONSERVATION PLAN FOR PUBLIC WATER SYSTEMS WITH FEWER THAN 1,000 SERVICES LOCATED IN AREAS COVERED BY A COORDINATED WATER SYSTEM PLAN DEVELOPED PURSUANT TO CHAPTER 70.116 RCW. Please refer to the Conservation Planning Requirements for additional details.

CONSERVATION PLANS ARE REQUIRED COMPONENTS OF WATER SYSTEM PLANS REQUIRED BY THE DEPARTMENT OF HEALTH (HEALTH), AND ARE REQUIRED BY THE DEPARTMENT OF ECOLOGY (ECOLOGY) PRIOR TO THE ISSUANCE OF WATER RIGHTS TO PUBLIC WATER SYSTEMS. Implementation of conservation plans may be conditions of approval of water system plans and for water right permits. Where water system plans are required, Health will be the lead agency in reviewing conservation plans. Health will coordinate review of conservation plans with Ecology. If you have any questions about the Conservation Planning Requirements contact the Health Regional Office Planner or Ecology regional office for your area.

For additional resources to assist in the development of your conservation plan please refer to the Water Conservation Handbook for Public Water Systems developed by Ecology and Health. Additionally, the Planning Handbook - A Guide for Preparing Water System Plans is available from Health to assist in the development of your overall water system plan. Finally, the Water Conservation Bibliography for Public Water Systems published by Health provides references to additional water conservation information and literature which can be obtained from the library and other sources. All of these documents are available from Ecology or Health.

NOTE: The information in this handout provides an overview of the specific requirements in the Conservation Planning Requirements. You should not rely on this handout exclusively to prepare your conservation plan. Please refer to the Conservation Planning Requirements to determine the specific guidelines and requirements for your conservation plan.

WATER USE DATA COLLECTION REQUIREMENTS CHECKLIST

This checklist summarizes the water use data reporting requirements in the Conservation Planning Requirements. Unless otherwise noted, data should be reported in cubic feet. The Conservation Planning Requirements establish 1991 as the initial year for water use data collection and reporting. If available, data should be shown for the past 5 years. Systems are encouraged to collect more than the minimum required data.

To meet the minimum requirements of the Conservation Planning Requirements, plans must contain currently available data on water usage for the categories of use listed below. If the data has not been collected for any of the categories below, you will be required to make a commitment in your conservation plan to begin collecting the data as required. This commitment must include a schedule for when the data will begin to be collected, and what improvements if any will be made to ensure the data is collectable. Systems which make this commitment to collect data, but do not follow through and collect the information may be unable to receive subsequent water system plan approval or approval for additional water rights, until data consistent with the checklist below is collected.

All data elements must be reported or a commitment must be made (for each data element not collected) to collect and report the data prior to the next water system plan update. Where available, daily, monthly and annual totals must be reported, not averages. Please read the footnotes to obtain additional important information.

A. Are you a new public water system which has not yet collected any water use data? ___ Yes ✓ No

If yes skip to number 13

Water Use Data	Data Collected?
1. Source of Supply Meter (monthly totals from each source)	✓ Yes ___ No
2. Total Annual Use - Each source (annual totals)	✓ Yes ___ No
3. Emergency Interties - Amount Imported (monthly totals from each intertie)	___ Yes ___ No ✓ None Imported
4. Wholesale - Amount Purchased (annual totals from each wholesaler)	___ Yes ___ No ✓ None Purchased
5. Peak Month Usage (peak monthly totals)	✓ Yes ___ No

6. Unaccounted for Water (annual totals) — ✓ Yes — No

7. Accounted for Non-Revenue Water (annual totals)[2] — ✓ Yes — No — None

8. Service Meter Usage (monthly totals)[3]

Single-Family	✓ Yes	No	Not Served
Multi-Family	✓ Yes	No	Not Served
Commercial/Governmental/Industrial	✓ Yes	No	Not Served
Agricultural	✓ Yes	No	Not Served

9. Emergency Interties - Amount Exported (monthly totals provided to each intertie) — Yes — No — ✓ None Exported

10. Wholesale - Amount Sold (monthly totals provided to each wholesale customer) — Yes — No — ✓ None Sold

11. Population Served (required to be reported - annual totals)[4] — ✓ Yes — No

12. Conservation Data (report the type of measure, level of implementation, duration and date begun - to be included in conservation plan, not reported with other data)[5] — ✓ Yes — No

13. Existing Rate Schedules — ✓ Yes — No

Data Collection Commitment?

14. Unreported Data Elements (for all data elements where data was not collected, the system is required to make a commitment to initiate and continue to collect data)[6] — Yes — No — ✓ All Reported

1. Those systems which do not have source meters will be required to estimate source production.

2. Accounted for non-revenue water includes uses which can be accounted for, but where revenue is not collected. Examples include fire protection, system flushing and other designated uses.

3. Those systems required to collect data which do not have service meters will be required to estimate how much each of these users has consumed. Include the number of connections in each category of user. Data may be collected through normal billing procedures. Monthly data may be estimated if customers are billed less frequently.

4. Report the number of connections and customers in the residential class, and number of connections for the other customer classes. Population served must be reported, a commitment to include the information in the next water system plan update is inadequate. Data on population per household is available from the State Office of Financial Management.

5. If no previous conservation efforts have been undertaken, development of a conservation plan consistent with the Conservation Planning Requirements will be acceptable.

6. Systems must either have collected all data or made a written commitment to initiate and continue data collection or the conservation plan can not be approved.

DEMAND FORECASTING REQUIREMENTS CHECKLIST

This checklist summarizes the demand forecasting factors which must be considered when forecasting future water needs. Demand forecasts must include demands from wholesale customers. To meet the minimum requirements of the Conservation Planning Requirements demand forecasts must incorporate the four factors listed below. Other factors determined to be appropriate by the system may be included as is appropriate. Demand forecasts must show demand for 6 and 20 year projections for both average daily demand and peak day demand, which depict future usage with and without conservation savings obtained from the conservation program (i.e. that factor in target water saving projections identified in the conservation program).

Factors Required to be Included	Included?	
1. Projected Population (based on information from local government and/or Office of Financial Management)	✓ Yes	__ No
2. Land Use/Zoning/Capacity (adopted land use and zoning regulations)	✓ Yes	__ No
3. Conservation Savings (water projected to be saved through the water conservation program must be factored into demand projection)	✓ Yes	__ No
4. Per Capita water use and Other Non-Residential Water Use (based on documented water usage - when available)	✓ Yes	__ No

WATER CONSERVATION PROGRAM REQUIREMENTS CHECKLIST

Conservation programs must include conservation objectives, evaluation of conservation measures, identification of selected conservation activities, and target water saving projections as discussed below. Please refer to the Conservation Planning Requirements for additional details.

Conservation Objectives. Goals and objectives of the conservation program shall be identified. These objectives should be designed to meet the needs of the specific water system (e.g., attain maximum utilization of current supplies, reduce peak daily consumption, reduce peak monthly consumption, reduce total annual consumption, promote long term efficiency with accelerated conservation on a short term basis, reduce usage from a specific customer class, develop public education and awareness, etc.). EACH WATER SYSTEM WILL NEED TO DEVELOP CONSERVATION OBJECTIVES WHICH LOGICALLY MEET ITS NEEDS.

Evaluation of Conservation Measures. Public water systems must evaluate all recommended conservation measures identified in the Conservation Planning Requirements and implement those that are required and those that meet the public water systems' needs. The specific measures to be evaluated depend upon the size of the system. However, systems are encouraged to evaluate measures above the minimum requirements. The system must explain decisions not to implement measures it is required to evaluate.

Identification of Selected Conservation Activities

-**Description.** Description of conservation measures being implemented (including required measures).

-**Schedule.** Schedule of when the conservation measures will be implemented (emphasis on 6 year implementation schedule).

-**Budget.** Projected budget for each selected conservation measure. Schedule and budget information should be shown together.

-**Monitoring Requirements.** Description of how the system will monitor the success of its conservation measures (e.g., documented reduction in water usage, distribution of conservation materials, implementation of specific measures).

Target Water Savings Projections. Each system will identify a percentage savings goal, based on the measures chosen for implementation, which the entire water conservation program will attempt to save. Because different systems may have already implemented different levels of conservation, and the conservation needs of each system are different, no percentage savings goal has been established in the Conservation Planning Requirements. This percentage savings goal must be factored into the demand forecast.

To meet the minimum requirements of the Conservation Planning Requirements all required measures must be planned to be implemented within six years, and all recommended measures must be evaluated and implemented if cost effective.

The following checklist summarizes the water conservation measures which are required to be implemented, and measures which are required to be evaluated and implemented where cost effective. In the absence of clear evidence to the contrary, estimates on the costs and benefits of conservation measures (i.e. selection of non-mandatory measures for implementation) will not be challenged. Please refer to the footnotes for additional important information.

Required Conservation Measures[1]	Measure Implemented?
1. Program Promotion	✓ Yes __ No
2. Install Source Meters	✓ Yes __ No

All recommended measures listed below must be evaluated for implementation in the conservation plan to meet the minimum requirements in the Conservation Planning Requirements.

Recommended Conservation Measures	Measure Evaluated?
3. Install Service Meters	✓ Yes __ No
4. Conservation Pricing	✓ Yes __ No

1. Program promotion is required to be implemented for all public water systems. Source metering is required to be implemented by all systems prior to receiving additional water rights. If additional water rights are not being sought, this measure must be evaluated and implemented if cost effective. If unaccounted for water is greater than 20 percent a leak detection and repair program must be initiated.

OTHER REQUIREMENTS CONTAINED IN THE CONSERVATION PLANNING REQUIREMENTS

In addition to developing a conservation plan as delineated above, the Conservation Planning Requirements also require that all public water systems preparing a water system plan identify existing rate schedules (include schedules for various customers classes if they are different), and inventory major potential sources and uses for reclaimed water.

Other Requirements	Information Included?
1. Inventory of Sources and Uses for Reclaimed Water[1]	__ Yes __ No

1. A list of potential sources and uses of reclaimed water is contained in the Conservation Planning Requirements. Only those systems with more than 25,000 service connections will be required to evaluate water reuse as a conservation measure.

Appendix N

Water Shortage Response Plan

WATER SHORTAGE RESPONSE PLAN

This Plan was incorporated into the 1997 to 2002 Water System Plan. No changes were made in the 2003 Water System Plan or for the 2009 Water System Plan.

Implementation Criteria:

This plan shall be implemented based on the following two degrees of short-term water shortage: moderate (supply deficiency), and severe (operating emergency). It is not anticipated that any additional steps to those included in the Water Conservation Plan would be implemented to address a minor shortage as defined in the Washington Department of Health publication, *Guidelines for the Preparation of Water Shortage Response Plans*, June 1988.

MODERATE – SUPPLY DEFICIENCY

A supply deficiency shall be considered when:

(a) The static depth drops in one or more wells by more than 4 ft. from the previous monthly reading for the same time of year.

(b) The well supply is unable to completely meet the maximum day demand as indicated by the failure of the storage reservoir to recover to the "full" level overnight, or

(c) The County declares the area to be under the influence of a prolonged drought and requests stringent water conservation measures.

The response to a supply deficiency shall be to implement a Stage 2 water conservation program as outlined below. The Stage 1 program is assumed to be in place as part of an ongoing Water Conservation Program

SEVERE – OPERATING EMERGENCY

An operational emergency shall be defined by:

(a) A well pump failure, multiple booster pump failure, other major component failure, or,

(b) An anticipated extended period for the loss of electrical power, such as a disruption of power from Puget Power during a winter storm, or

(c) The depletion of water storage by more than 60 percent by a high water use for fire fighting, water main break or any other occurrence.

The first response to an operating emergency may be to implement a Stage 2 water conservation program as outlined below. Portions or all of the provisions of a Stage 3 water conservation program may be implemented if a Stage 2 program is ineffective, or the assessment of the emergency dictates the need to proceed directly to the Stage 3 program.

Conservation Programs:

STAGE 2 WATER CONSERVATION PROGRAM

The paragraph numbers correspond to the conservation measures listed in the Town's WATER CONSERVATION PLAN.

1. Restrict lawn sprinkling and car washing to a maximum of one day per week. Special allowance may be made for new lawns or landscaping such as twice per week watering. Restrict lawn watering to early morning or late evening. If the duration of the supply deficiency is expected to be only a few days, ban lawn watering and car washing for a fixed period.

2. Restrict water main flushing to emergency purposes, (e.g. a water quality problem).

3. Monitor lawn watering to prevent water wastage, (e.g. runoff into the street). Monitor use of automatic lawn sprinkler systems to ensure once per week operation and minimum application time.

4. Ban water from fire hydrants for fire department training, filling of street flushing trucks, etc.

5. Perform special water audit (see Water Conservation Program) to detect system leaks.

6. Perform a cursory water use inspection of customer premises to determine if water is being wasted. Inspection may be initiated in response to the complaints of other customers about water wastage. Inspection may be limited to conversation with the homeowner about his water use and conservation practices.

7. If a prolonged period of water shortage is anticipated, institute a temporary water rate surcharge to encourage conservation.

STAGE 3 WATER CONSERVATION PROGRAM:

1. Ban all water use not required for public health. The ban would include all lawn sprinkling, irrigation of picnic area and other community areas, and car washing and car washing.

2. Suspend all water main flushing.

3. Suspend all filling of swimming pools, (i.e., make-up water).

4. By-pass water treatment plants.

5. Perform a water use inspection of all customers to determine if water is being wasted. Inspection should be based on conversation with the home owner and a site inspection (outdoor water use).

Public Notification:

Notification of the implementation of a Stage 2 Water Conservation Program shall be by mail. The letter shall include an explanation of the reason for the program, the anticipated duration of the program, and a list of conservation actions.

Notification of a Stage 3 Water Conservation Program shall be first by telephone or door-to-door contact with residents, followed by a hand-delivered or mailed letter that includes an explanation of the reason for the program, the anticipated duration of the program, and a list of conservation actions.

Enforcement:

Enforcement of the Stage 2 Water Conservation Program will be primarily through an appeal for voluntary compliance.

Enforcement of a Stage 3 Water Conservation Program will first be through an appeal for voluntary compliance, then through shut-off of the service. The shut-off water service should be based on need to protect the water supply from potential contamination by preventing the loss of water system pressure in any part of the system resulting from inadequate supply.

Appendix O

Cross Connection Control Program

CROSS CONNECTION CONTROL PROGRAM

Table of Contents

A. BACKGROUND ..... Page 1
B. REQUIREMENTS FOR PROGRAM ..... Page 1
C. PROGRAM OBJECTIVES ..... Page 2
D. REQUIRED ELEMENTS OF PROGRAM ..... Page 2
E. PROGRAM OPERATION ..... Page 4
F. PROGRAM SCHEDULES ..... Page 11
G. PROGRAM REFERENCE DOCUMENTS ..... Page 11

Attachments

Application for Water Service (form)

Hazard Assessment Forms
- Water Use Questionnaire – Residential Customers
- Survey Report – Commercial Customers

Record Forms
- BPA Test Report
- BPA File Record (see computer spreadsheet maintained by Town)
- Backflow Incident Report

List of Purveyor Pre-approved BATs

WA DOH List of Approved Assemblies (list incorporated but not included herewith)

BPA Installation – Standard Plans (see Water System Plan standard drawings)

W-11	Standard Plan,	Residential Service Connection Details
W-12	Standard Plan,	Commercial Service Connection Details
W-17	Standard Plan,	0.75" & 1" RPBA Details
W-18	Standard Plan,	1.5" & 2" RPBA Details
W-19	Standard Plan,	0.75" & 1" DCVA Details
W-20	Standard Plan,	Fire Line DCDA Details
W-21	Standard Plan,	Hydrant RPBA Details
W-22	Standard Plan,	DCVA & RPBA Application Details

Backflow Incident Response Plan

Inventory of Assemblies (see computer spreadsheet maintained by Town)

WA DOH Annual Summary Report forms (when available from WA DOH)

Education Brochures (PNWS-AWWA brochures)

CROSS CONNECTION CONTROL PROGRAM

A. BACKGROUND

The Town of Coupeville adopted a cross connection control program with the 1997 to 2002 *Water System Plan*. The authority for the program to protect the public water system was established by ordinance and is included in Chapter 13.08.140 of the Town Code (copy included in Appendix V).

The 1997 program was established as a cooperative effort between the Town building inspector and public works director. The day-to-day administration of the program for the protection of the public water system was assigned to the building inspector.

The changes incorporated herein were made to comply with the current requirements of the WA Department of Health.

B. REQUIREMENTS FOR PROGRAM

The **Town**, hereinafter referred to as the Purveyor, as the operator of a public water system has the responsibility to protect its system from contamination due to cross connections. A cross connection may be defined as "Any actual or potential physical connection between a potable water line and any pipe, vessel, or machine that contains or has a probability of containing a non-potable gas or liquid, such that it is possible for a non-potable gas or liquid to enter the potable water system by backflow".

The Purveyor's responsibility for cross connection control begins at the water supply source, includes all the public water treatment, storage, and distribution facilities, and ends at the point of delivery to the customer's water system, which begins at the downstream end of the service connection or water meter located on the public right-of-way or utility-held easement. The Purveyor is not responsible for eliminating or controlling cross connections within the consumer's water system. Under chapter 19.27 RCW, the responsibility for cross connection control within the consumer's water system, i.e., within the property lines of the consumer's premises, falls under the jurisdiction of the local administrative authority, i.e., Town's plumbing inspector and Island County plumbing inspector (for the portion of the Town's water system lying outside of the Town Limits).

The specific requirements of the WA Department of Health for the Purveyor's program are stated in Chapter 246-290-490 of the Washington Administrative Code. This Chapter was most recently revised in April 1999.

C. PROGRAM OBJECTIVES

The objectives of the cross connection control program are to:

1. Reasonably reduce the risk of contamination of the public water distribution system, and

2. Reasonably reduce the Purveyor's exposure to legal liability arising from the backflow of any contaminant originating from the customer's plumbing system and then supplied to other customers.

D. REQUIRED ELEMENTS OF PROGRAM

The following are excerpts from the Washington Administrative Code (WAC) 246-290-490:

Element 1: The purveyor shall adopt a local ordinance, resolution, code, bylaw, or other written legal instrument that:

a) Establishes the purveyor's legal authority to implement a cross-connection control program;

b) Describes the operating policies and technical provisions of the purveyor's cross-connection control program;

c) Describes the corrective actions used to ensure that consumers comply with the purveyor's cross-connection control requirements.

Element 2: The purveyor shall develop and implement procedures and schedules for evaluating new and existing service connections to assess the degree of hazard posed by the consumer's premises to the purveyor's distribution system and notify the consumer within a reasonable time frame of the hazard evaluation results. At minimum, the program shall meet the following:

a) For new connections made on or after the effective date of these regulations, procedures shall ensure that an initial evaluation is conducted before service is provided;

b) For existing connections made prior to the effective date of these regulations, procedures shall ensure that an initial evaluation is conducted in accordance with a schedule acceptable to the department {WA DOH}; and

c) For all service connections, once an initial evaluation has been conducted, procedures shall ensure that periodic reevaluations are conducted in accordance with a schedule acceptable to the department and whenever there is a change in the use of the premises.

Element 3: The purveyor shall develop and implement procedures and schedules for ensuring that:

a) Cross-connections are eliminated whenever possible;

b) When cross-connections cannot be eliminated, they are controlled by installation of approved backflow preventers commensurate with the degree of hazard; and

c) Approved backflow preventers are installed in accordance with the requirements of subsection (6) of this section {of WAC 246-290}

Element 4: The purveyor shall ensure that personnel, including at least one person certified as a CCS, are provided to develop and implement the cross-connection control program.

Element 5: The purveyor shall develop and implement procedures to ensure that approved backflow preventers are inspected and/or tested (as applicable) in accordance with subsection (7) of this section {of WAC 245-290}.

Element 6: The purveyor shall develop and implement a backflow prevention assembly testing quality control assurance program including, but not limited to documentation of tester certification and test kit calibration, test report contents, and time frames for submitting completed test reports.

Element 7: The purveyor shall develop and implement (when appropriate) procedures for responding to backflow incidents.

Element 8: The purveyor shall include information on cross-connection control in the purveyor's existing program for educating consumers about water system operations. Such a program may include periodic bill inserts, public service announcements, pamphlet distribution, notification of new consumers and consumer confidence reports.

Element 9: The purveyor shall develop and maintain cross connection control records including, but not limited to, the following:

a) A master list of service connections and/or consumer's premises where the purveyor relies upon approved backflow preventers to protect the public water system from contamination, the assessed hazard level of each, and the required backflow preventer(s);

b) Inventory information on:

   i. Approved air gaps installed in lieu of approved assemblies including exact air gap location, assessed degree of hazard, installation date, history of inspections, inspection results, and person conducting inspections;

ii. Approved backflow assemblies including exact assembly location, assembly description (type, manufacturer, model, size, and serial number), assessed degree of hazard, installation date, history of inspections, tests and repairs, test results, and person performing tests; and

iii. Approved AVBs used for irrigation system applications including location, description (manufacturer, model, and size), installation date, history of inspections, and person performing inspections.

Element 10: Purveyors who distribute and/or have facilities that receive reclaimed water within their water service area shall meet any additional cross-connection control requirements imposed by the department under a permit issued in accordance with chapter 90.46 RCW.

E. PROGRAM OPERATION

Authority - The Town Code establishes the authority for the program. The attached service contract shall be the primary enforcement authority for all new customers.

For customers supplied prior to the adoption of the Ordinance establishing a service contract for new customers, an implied service contract allows the Purveyor to protect the distribution system from contamination through a Purveyor installed backflow preventer on a customer's service.

The written and implied contract terms are discussed further hereinafter under the section "Policy".

Program Administration - The responsibility for administration rests with the Town Council, either as a body or to an individual director or employee. Administration of the program has been assigned to the Town's Public Works Director, hereinafter referred to as the Director.

The administration of the program shall be periodically audited by a WA Department of Health certified cross connection control specialist (CCS) employed by the Purveyor. At a minimum, the audit will occur every six years. For systems required to update a water system plan, the audit should be part of water system plan update. When requested, the CCS shall also advise the Director on cross connection control matters.

The current CCS employed by the Purveyor is:

Malcolm Bishop
Pubic Works Director

Policy - The following service policy shall apply to all new and existing customers:

Water services to all non-single family or duplex residential customers, hereinafter referred to as "commercial customers", shall be isolated at the meter by a Purveyor approved double check valve assembly (DCVA) or reduced pressure backflow assembly (RPBA). All customers described in Table 9 of WAC 246-290-490 shall be isolated with a RPBA. All other commercial customers shall be isolated with a DCVA.

Water services to all single family or duplex residential customers, hereafter referred to as "residential customers", shall be isolated at the meter by a Purveyor installed meter check valve (single or dual), except where the customer has special plumbing that increases the risk to the Purveyor's distribution system, such as, but not limited to, the following:

1) Lawn irrigation system
2) Solar heating system
3) Auxiliary source of supply, e.g., well
4) Piping for hobby farming, etc.
5) Residential fire sprinkler system
6) Property containing small boat moorage

All residential customers described in Table 9 of WAC 246-290-490 shall be isolated with a RPBA. All other residential customers with special plumbing as described in "2", above, shall be isolated with a DCVA. For all customers that have a written service contract with the Purveyor, the premises isolation DCVA or RPBA required above shall be:

1. Purchased and installed by the customer (at the customer's expense) immediately downstream of the water meter in accordance with the Purveyor's standards described hereinafter;

2. Maintained, repaired, tested, and inspected in accordance with the Purveyor's standards described hereinafter;

For new customers, water shall not be turned on at the meter until the customer complies with the above requirements.

The failure of the customer to comply with the above installation and maintenance requirements shall constitute the customer's breach of contract. The Purveyor may then proceed with corrective action provisions stipulated in the contract.

Customers without a written contract shall be considered to have an implied contract that requires the customer to bear all reasonable costs of service. The Purveyor shall install the required DCVA or RPBA on the service, upstream of the meter, and charge the customer for the cost of the initial installation, and all future maintenance, testing and repair, as set forth in the Purveyor's schedule of rates and charges. The failure of the customer to pay these costs shall constitute the customer's breach of contract, and the Purveyor shall proceed with the established delinquency of payment procedures. As an alternative, the customer may sign a service contract, and install the required backflow preventer downstream of the meter.

The Purveyor has no regulatory responsibility or authority over the installation or operation of the customer's plumbing system. The customer is solely responsible for compliance with all applicable regulations, and for prevention of contamination of his plumbing system from sources within his premises. Any action taken by the Purveyor to survey plumbing, inspect or test backflow prevention assemblies, or to require premises isolation (installation of DCVA or RPBA on service) is solely for the purposes of reducing the risk of contamination of the Purveyor's distribution system.

No action by the Purveyor shall be construed by the customer to provide guidance to the customer on the safety or reliability of the plumbing system. Other than the general public education program discussed hereinafter, the Purveyor will provide no advice to the customer on the design and installation of plumbing.

Except for easements containing the Purveyor's distribution system, the Purveyor will not undertake work on the customer's premises.

Cross Connection Surveys - The procedures for evaluating the backflow prevention requirements for new and existing customers are:

1. For all new commercial services, the customer shall submit with the application for water service an evaluation by a purveyor pre-approved, WA Department of Health certified cross connection control specialist (CCS) of the hazard posed by the proposed plumbing system, with recommendations for the installation at the meter of either a DCVA or RPBA. The Purveyor, at the discretion of the Director, may accept the recommendation or submit the recommendations to a CCS employed by the Purveyor for peer review and concurrence, before acceptance.

2. For all new residential services, the customer shall submit with the application for water service a completed "Water Use Questionnaire", copy attached hereto. If the customer's reply indicate special plumbing, such as a lawn sprinkler system, the customer shall submit an evaluation by a purveyor pre-approved, WA Department of Health certified cross connection control specialist (CCS) of the hazard posed by the proposed special plumbing system, with recommendations for the installation at the meter of either a DCVA or RPBA.

As an alternative to the above requirement for a survey by a CCS, at the discretion of the Director, the Purveyor may specify the backflow preventer required to be installed as a condition of service.

For all existing commercial services, the customer shall be requested to submit within two years an evaluation by a purveyor pre-approved, WA Department of Health certified cross connection control specialist (CCS) of the hazard posed by the proposed plumbing system, with recommendations for the installation at the meter of either a DCVA or RPBA. The Purveyor, at the discretion of the Director, may accept the recommendation or submit the recommendations to a CCS employed by the Purveyor for peer review and concurrence, before acceptance.

For all existing residential services, the customer shall be requested to submit within four months a completed "Water Use Questionnaire". If the customer's reply indicate special plumbing, the customer shall submit an evaluation by a purveyor pre-approved, WA Department of Health certified cross connection control specialist (CCS) of the hazard posed by the proposed special plumbing system, with recommendations for the installation at the meter of either a DCVA or RPBA.

As an alternative to the above requirement for a survey by a CCS, at the discretion of the Director, the Purveyor may specify the backflow preventer required to be installed as a condition of service. Guidance on the type of backflow preventer shall be provided by the Purveyor's CCS.

For existing services, should the customer fail to supply the requested information for a hazard assessment, the Director may have the assessment made by a CCS employed by the Purveyor, require the installation of an RPBA, or take other such actions consistent with the previously stated policies.

For subsequent cross connection surveys, procedures for evaluating the backflow prevention requirements are:

1. For residential services not required to have a DCVA or RPBA, every two years and/or at the time of a change in ownership of the premises, the customer shall be requested to submit within two months a completed "Water Use Questionnaire". The procedure for evaluating the need to change the hazard assessment, and thus require a DCVA or RPBA shall be the same as the procedure for the initial assessment.

2. For residential services with a DCVA or RPBA, and for all commercial services, the customers shall be required to submit with the annual report on the testing of the DCVA or RPBA, a reevaluation of the hazard assessment. To facilitate the reevaluation, the customer should employ for testing the DCVA or RPBA a Purveyor pre-approved, WA DOH certified CCS (dual CCS and BAT certification). Alternatively, the customer may employ a CCS to accompany the BAT

Testing of Assemblies - The following requirements apply to all backflow prevention assemblies and air gaps relied upon by the Purveyor to protect its public water system.

The DCVA or RPBA installed on the service for premises isolation shall be inspected and tested by a WA DOH certified backflow assembly tester (BAT) upon installation and at least annually thereafter, after repair, replacement or relocation, and upon the specific request of the Purveyor as a spot quality assurance check. As previously noted, the BAT shall also retain WA DOH certification as a CCS.

For customer-owned assemblies, the customer shall employ a Purveyor pre-approved BAT to complete the inspection and test within 30 days of date of mailing by the Purveyor of a notification to test the assembly. The test report shall be completed and signed by the BAT, then countersigned and returned by the customer to the Purveyor within 45 days of the date of mailing of the notification to test the assembly.

The customer may make a request for an extension of the completion time for the return of a test report. An extension up to 90 days may be granted at the discretion of the Director.

The DCVA, DCDA, RPBA and RPDA, shall be tested in accordance with the test performance criteria outlined in Chapter 8 "Assembly Test Procedures" in the PNWS-AWWA CROSS CONNECTION CONTROL MANUAL, Sixth Edition, 1995.

The test report form supplied by the Purveyor, copy attached hereto, shall be completed and returned.

Quality Assurance - The following requirements apply to all backflow prevention assemblies and air gaps relied upon by the Purveyor to protect its public water system.

The test report forms submitted by the customer shall be reviewed upon receipt by the Director, and periodically by a CCS employed by the Purveyor to audit the cross connection control program. Test reports should be reviewed by the CCS at least annually.

To ensure that the equipment used to test assemblies has been checked for calibration within the last year, the Purveyor shall list as pre-approved those BATs listed by another water utility with greater than 1,000 connections that has a quality assurance program. Alternatively, the BAT may submit with a test report a report on the verification of the calibration of his test equipment and current certification status.

Approved Backflow Assemblies - The Purveyor shall rely upon the Washington Department of Health's published list of "Approved" backflow prevention assemblies. This list shall be obtained from the State of Washington annually.

Records - The Director shall maintain copies of all records, including but not limited to, correspondence, survey results, and backflow assembly test reports. The record form "Record of Backflow Prevention Assemblies" (Form B-1), included herewith, shall be used to record the location of all backflow prevention assemblies required by the Purveyor.

List of Certified Testers - The list of local certified backflow assembly testers (BAT) and cross connection control specialists (CCS) approved by the Purveyor is included herewith. Others may be added to this list upon written request. A list of all certified testers may be obtained from the WA Department of Health.

Coordination with Plumbing Authority – For the service area outside of the Town Limits, a copy of this cross connection control program is provided to **Island County Plumbing Inspector**, hereinafter referred to as the County administrative authority, via a copy of the Purveyor's water system plan submitted to the **Island County** Health Department.

The Director shall provide information to the County administrative authority in a timely manner of:

1. Any requirement imposed on a residential customer for the installation of a DCVA or RPBA on the service, with a description of the cross-connection hazard identified,

2. Any upgrade of the premises isolation from a DCVA to a RPBA,

3. Any action taken to discontinue water supply, and

4. Any backflow incident.

The Purveyor's survey of a customer's premises, whether by a representative of the Purveyor or through the evaluation of a questionnaire completed by the customer, is for the sole purpose of establishing the Purveyor's minimum requirements for the protection of the public water supply system, commensurate with the Purveyor's assessment of the degree of hazard. It shall not be assumed by the customer or any regulatory agencies that the Purveyor's survey, requirements for the installation of backflow prevention assemblies, lack of requirements for the installation of backflow prevention assemblies, or other actions by Purveyor personnel or agent constitutes an approval of the customer's plumbing system, or an assurance to the customer or any regulatory agency, of the absence of cross connections therein.

Coordination within the Town Limits, i.e., with the Town's plumbing inspector, shall consist of the following:

1. Plan review for new construction and renovations.

2. Undertaking joint cross connection surveys and plumbing inspections of new construction and renovations.

3. Communications with customers.

4. Issuing notification for the testing of backflow assemblies.

5. Maintaining a database of backflow assemblies.

6. Requiring plumbing permits for new backflow prevention assemblies required by the Purveyor of existing customers.

It is understood that the Town as local administrative authority (plumbing inspector) is responsible to "ensure" the testing and maintenance of all backflow prevention assemblies and devices not relied upon by the Purveyor to protect the public water system. Accordingly, the database discussed above will differentiate between assemblies relied upon by the Purveyor, e.g., for premises isolation, and those required for compliance with the plumbing code.

Backflow Incident Response - The Purveyor's emergency procedures (cross connection control section attached hereto) include a backflow incident response plan. The response plan is supplemented by the PNWS-AWWA BACKFLOW INCIDENT INVESTIGATION PROCEDURES, First Edition, 1996.

Public Education - The public education program for the Purveyor shall consist mainly of the distribution with water bills of information brochures describing the cross connection hazards in homes and the recommended devices that should be installed by the homeowner to reduce the hazard. The education program emphasizes the responsibility of the customer in preventing the contamination of his water supply. The information brochures may be obtained from Pacific Northwest Section, American Water Works Association (PNWS-AWWA), P. O. Box 19581, Portland, Oregon, 97280, telephone 877-767-2992 (toll free), other backflow prevention associations and other water utilities.

The following PNWS-AWWA brochures are incorporated into the education program:

[# 1] *Residential Fire Sprinkler Systems and Backflow Prevention*

[# 2] *Cross Connections Can Create Health Hazards*

[# 3] *Lawn Irrigation Systems and Backflow Prevention*

[# 4] *Help Protect Your Drinking Water from Contamination, Household Hazards*

[# 5] *Protect Your Water Heater from Thermal Expansion*

Information brochures shall be periodically distributed to all customers; the period between distributions of a brochure on the topic of cross connection control shall not exceed three years.

Copies of all of the brochures distributed by the Purveyor within the last six years shall be provided to all new customers at the time the new customer signs a service agreement. Additional copies will be provided to customers upon request.

Installation Standards - All DCVA and RPBA on the customer's service shall be installed in accordance with the recommendations outlined in the PNWS-AWWA CROSS CONNECTION CONTROL MANUAL, Sixth Edition, 1995, and in the Purveyor's "standard detail" drawings.

F. PROGRAM SCHEDULE

The table on the following page shows the schedule for program implementation and operation.

Installation of backflow prevention assemblies on existing customers shall be required when the customer changes (i.e., change in ownership of property), or the customer's water use changes (e.g., change in plumbing, change in tenant, etc.).

G. PROGRAM REFERENCE DOCUMENTS

The following publications shall be utilized for the operation of the program:

PNWS-AWWA CROSS CONNECTION CONTROL MANUAL, Sixth Edition, 1995, or latest edition thereof.

PNWS-AWWA BACKFLOW INCIDENT INVESTIGATION PROCEDURES, First Edition, 1996, or latest edition thereof.

WA DOH CROSS-CONNECTION CONTROL GUIDANCE MANUAL FOR SMALL WATER SYSTEMS, 2000, or latest edition thereof.

RISK ASSESSMENT / INSTALLATION OF BACKFLOW ASSEMBLIES

Task	1996 WSP Schedule	Status	2009 WSP Schedule
Assessment of Hazard / Requirement for BPA for new Customers		Procedure in place	
Initial Assessment of High Hazards for Mandatory Premises Isolation			
Agricultural	1996	Complete *	
Beverage bottling plants	1997	Complete	
Car washes	NA	NA	
Chemical plants	NA	NA	
Commercial laundries/dry cleaners	NA	NA	
Premises with reclaimed water	NA	NA	
Film processing	NA	NA	
Food processing	NA	NA	
Hospitals, nursing homes, medical clinics, mortuaries, etc.	1997	30%	2003
Laboratories (commercial)	NA	NA	
Metal plating	NA	NA	
Petroleum processing	NA	NA	
Piers and docks	1996	Complete *	
Wastewater lift stations	1996	Complete *	
Wastewater treatment plants	1996	Complete **	
Premises with unapproved supply	1996	Complete	
Initial Assessment of Remaining Commercial Customers	1998	Incomplete	2010
Initial Assessment of Customers With Fire Lines	1998	Incomplete	2010
Initial Assessment of Single-family Residential Customers	1999	Not done	2010
Notification of High Hazard Customers for BPA Installation	1998	Not done	2010
Notification of Remaining Customers for BPA Installation	Not scheduled	Not done	2010
Notification of Customers with Fire Lines for BPA Installation	Not scheduled	Not done	2010
Notification of SF Residential Customers for BPA Installation	Not scheduled	Not done	2010
Installation of High Hazard BPA for Premises Isolation	1998	Incomplete	2010
Installation of BPA on Remaining Commercial Customers	Not scheduled	Not done	2010
Installations of BPA on Fire Lines	Not scheduled	Not done	With bldg. Modifications
Installation of BPA for SF Residential Customers	Not scheduled	Not done	2011
Reassessment of Commercial Customers and BPA Installation	1999	Not done	Every 2 years
Reassessment of SF Residential Customers and BPA Installation	Not scheduled	Not done	Every 6 years

* DCVA installed prior to WAC revisions; ** Installed with WWTP expansion.

TOWN OF COUPEVILLE
4 NE Seventh
PO Box 725
Coupeville WA 98239
360.678.4461 • 360.678.3299 Fax

NANCY CONARD Mayor
LARRY KWARSICK Planner
DAVID PENROD Town Marshal
JUDY THOMAS Clerk Treasurer
MALCOLM BISHOP Public Works Director

Date

Donna Keeler
P. O. Box 1294
Coupeville, WA 98239 - 1294

Re: ANNUAL BACKFLOW PREVENTION ASSEMBLY TESTING

Dear Donna,

The backflow prevention assembly installed in your water supply system is due for annual testing as required by state code. Please have the testing performed by a person holding a certificate of competency as a Backflow Assembly Tester (BAT). A list of certified testers is enclosed.

If your device fails its test, be sure that the necessary repairs are made. The tester will need to fill out the enclosed Test Report upon completion of a satisfactory test and return the completed report to Coupeville Town Hall within 30 days. Please note any changes made.

Penalties, including fines and water service termination may result from failure to or delay in providing proof of satisfactory testing within the specified period. Additional information relative to this matter may be obtained by contacting Malcolm Bishop, Public Works Director, at Town Hall, 360-678-4461.

Sincerely,

Malcolm Bishop
Public Works Director

Encl: List of certified testers, Copy of blank Test Reports

Date

Name
Company
Address
Address

Re: Service address
ANNUAL BACKFLOW PREVENTION ASSEMBLY TESTING

Our records show that you have one or more backflow prevention assemblies in your water service. These devices are installed to prevent water within your building or fire service line from back flowing into the public water system. Backflow prevention assemblies are required by state code to have an annual inspection and a copy of the test results furnished to this office. The inspection must be performed by a person holding a certificate of competency as a Backflow Assembly Tester (BAT). A list of state certified testers is enclosed.

The tester will need to fill out the enclosed Test Report upon completion of a satisfactory test for each assembly and return the completed reports to Coupeville Town Hall within 30 days.

Penalties, including fines and water service termination may result from failure to or delay in providing proof of satisfactory testing within the specified period. Additional information relative to this matter may be obtained by contacting Malcolm Bishop, Public Works Director, at Town Hall, 360-678-4461.

Sincerely,

Malcolm Bishop
Public Works Director

Encl: List of certified testers
Copy of blank Test Report

TOWN OF COUPEVILLE

4 NE Seventh
PO Box 725
Coupeville WA 98239
360.678.4461 • 360.678.3299 Fax

NANCY CONARD Mayor
LARRY KWARSICK Planner
DAVID PENROD Town Marshal
JUDY THOMAS Clerk Treasurer
MALCOLM BISHOP Public Works Director

Cross Connection Control Survey Report

For Commercial Customers

CUSTOMER INFORMATION

Date: _____

Building Information:

Name: _____

Location address: _____

_____

Business Information:

Business Name: _____

Type of Business _____

Description of Water Use: _____

_____

Business Owner: _____

Location address: _____

_____

Mailing address: _____

_____

Contact person: _____

Contact person phone no: _____

Water Service & Backflow Prevention Assembly (BPA) Size/Type:

	Service Size	Meter Size	BPA Size	BPA Type
Domestic				
Fire line				
Irrigation				
Other				

(This section to be filled out and signed by cross connection control specialist.)

CROSS CONNECTION CONTROL SPECIALIST (CCS) INFORMATION

Name: _____ Telephone: _____

Company Name: _____

Address: _____

_____ Zip: _____

WA DOH Certificate #: _____ Year certified _____

SURVEY RESULTS:

Item	Location & Description of Cross Connection	Backflow Prevention Provided/Required

Attach additional sheets if needed.

SURVEYOR'S COMMENTS:

_____

_____

SURVEYOR'S RECOMMENDATIONS:

_____

_____

I certify that this survey accurately reflects the overall risk posed to the Purveyor's distribution system by the customers' plumbing system and that the backflow prevention assembly is properly installed. Based on the above survey, I find that (check one):

☐ The present _____ (RPBA or DCVA) is commensurate with the degree of hazard.

☐ The premises isolation assembly or assemblies should be changed for the reasons stated under "Surveyor's Comments" above.

_____ _____

Signature of CCS *Date*

This certifies receipt of this completed survey report and its submittal to the Town of Coupeville.

_____ _____

Signature of Customer or authorized agent *Date*

It shall not be assumed by the customer or any regulatory agencies that this requirement by the Purveyor for this survey, or for the installation of a specific backflow prevention assembly on a service pipe constitute an approval of the customer's plumbing system, compliance with the customer's plumbing system with the plumbing code, or an assurance to the customer of the absence of cross connection therein.

The completed survey report shall be first signed by the CCS conducting the survey, then counter-signed by the owner of the premises surveyed or his agent.

The survey shall include the inspection of the assembly installed on a service for premises isolation to verify its correct installation and status as a currently listed approved assembly by the WA DOH.

TOWN OF COUPEVILLE
4 NE Seventh
PO Box 725
Coupeville WA 98239
360.678.4461 • 360.678.3299 Fax

NANCY CONARD Mayor
LARRY KWARSICK Planner
DAVID PENROD Town Marshal
JUDY THOMAS Clerk Treasurer
MALCOLM BISHOP Public Works Director

Cross Connection Control Survey Report

For Government Customers

CUSTOMER INFORMATION

Date: _____

Building Information:

Name: _____

Location address: _____

_____

Department Information:

Department Name: _____

Description of Water Use: _____

_____

Mailing address: _____

_____

Contact person: _____

Contact person phone no: _____

Water Service & Backflow Prevention Assembly (BPA) Size/Type:

	Service Size	Meter Size	BPA Size	BPA Type
Domestic				
Fire line				
Irrigation				
Other				

(This section to be filled out and signed by cross connection control specialist.)

CROSS CONNECTION CONTROL SPECIALIST (CCS) INFORMATION

Name: _____ Telephone: _____

Company Name: _____

Address: _____

_____ Zip: _____

WA DOH Certificate #: _____ Year certified _____

SURVEY RESULTS:

Item	Location & Description of Cross Connection	Backflow Prevention Provided/Required

Attach additional sheets if needed.

SURVEYOR'S COMMENTS:

_____

_____

SURVEYOR'S RECOMMENDATIONS:

_____

_____

I certify that this survey accurately reflects the overall risk posed to the Purveyor's distribution system by the customers' plumbing system and that the backflow prevention assembly is properly installed. Based on the above survey, I find that (check one):

☐ The present _____ (RPBA or DCVA) is commensurate with the degree of hazard.

☐ The premises isolation assembly or assemblies should be changed for the reasons stated under "Surveyor's Comments" above.

_____ _____

Signature of CCS *Date*

This certifies receipt of this completed survey report and its submittal to the Town of Coupeville.

_____ _____

Signature of Customer or authorized agent *Date*

It shall not be assumed by the customer or any regulatory agencies that this requirement by the Purveyor for this survey, or for the installation of a specific backflow prevention assembly on a service pipe constitute an approval of the customer's plumbing system, compliance with the customer's plumbing system with the plumbing code, or an assurance to the customer of the absence of cross connection therein.

The completed survey report shall be first signed by the CCS conducting the survey, then counter-signed by the owner of the premises surveyed or his agent.

The survey shall include the inspection of the assembly installed on a service for premises isolation to verify its correct installation and status as a currently listed approved assembly by the WA DOH.

TOWN OF COUPEVILLE
4 NE Seventh
PO Box 725
Coupeville WA 98239
360.678.4461 • 360.678.3299 Fax

NANCY CONARD Mayor
LARRY KWARSICK Planner
DAVID PENROD Town Marshal
JUDY THOMAS Clerk Treasurer
MALCOLM BISHOP Public Works Director

Cross Connection Control Survey Report

For Residential Customers

DATE: _____

TO: _____

_____

_____

The attached brochure describes a "cross connection" and the potential for contamination of the public water system through unprotected cross connections. The purpose of this questionnaire is to help determine if you have any special plumbing or activities which may pose an increased risk of contamination of the water distribution system. Please respond by checking the appropriate box below:

- ☐ Yes ☐ No Underground lawn sprinkler system
- ☐ Yes ☐ No Water treatment system (e.g., water softener)
- ☐ Yes ☐ No Solar heating system
- ☐ Yes ☐ No Residential fire sprinkler system
- ☐ Yes ☐ No Private well, including those not connected to your plumbing system
- ☐ Yes ☐ No Grey water system or cistern for irrigation water
- ☐ Yes ☐ No Piping for livestock watering
- ☐ Yes ☐ No Water supply to dock or small boat moorage
- ☐ Yes ☐ No Grinder pump and/or off-site septic field

BY: _____ Date: _____

Resident's signature

Phone Number: _____

Please return the completed questionnaire to the address on the letterhead.

If you have checked any of the above, we will contact you to request further information. Your cooperation in completing this questionnaire is most appreciated.

If you have any questions, please contact Malcolm Bishop, Public Works Director at 360-678-4461

TOWN OF COUPEVILLE
4 NE Seventh
PO Box 725
Coupeville WA 98239
360.678.4461 FAX 360.678.3299

NANCY CONARD *Mayor*
MALCOLM BISHOP *Public Works Director*
LARRY KWARSICK *Town Planner*
DAVID PENROD *Town Marshal*
JUDY THOMAS *Clerk-Treasurer*

BACKFLOW PREVENTION ASSEMBLY TEST REPORT

NAME: _____

MAILING ADDRESS: _____

SERVICE ADDRESS: _____

LOCATION: _____

This is for ☐ Premises Isolation ☐ In-Premise Isolation

CROSS CONNECTION CONTROL FOR: _____ TYPE ASSEMBLY: _____

MANUFACTURER: _____ MODEL: _____ SIZE: _____ SERIAL NO. _____

	INITIAL TEST RESULTS		TEST AFTER REPAIR OR CLEANING	
RPBA OR RPDA	No. 1 Check: Closed tight .... ☐ _____ psid Leaked. ..... ☐ Relief Valve Opened ..... _____ psid No. 2 Check: Closed tight .... ☐ Leaked. ..... ☐ _____ psid Passed Test: Yes _____ No _____		No. 1 Check: Closed tight ..... ☐ _____ psid Leaked. ..... ☐ Relief Valve Opened ..... _____ psid No. 2 Check: Closed tight ..... ☐ Leaked. ..... ☐ _____ psid Passed Test: Yes _____ No _____	
DCVA OR DCDA	No. 1 Check: Closed tight .... ☐ _____ psid Leaked. ..... ☐ No. 2 Check: Closed tight .... ☐ _____ psid Leaked. ..... ☐ Passed Test: Yes _____ No _____		No. 1 Check: Closed tight ..... ☐ _____ psid Leaked. ..... ☐ No. 2 Check: Closed tight ..... ☐ _____ psid Leaked. ..... ☐ Passed Test: Yes _____ No _____	
PVB	Air Inlet: Opened ..... _____ psid Failed to open ... ☐ Check Valve: ..... _____ psid Leaked. ..... ☐ Passed Test: Yes _____ No _____		Air Inlet: Opened ..... _____ psid Failed to open ... ☐ Check Value: ..... _____ psid Leaked. ..... ☐ Passed Test: Yes _____ No _____	
AG	Pipe Outlet Size _____		Minimum Separation Yes _____ No _____	

IS THIS A PROPER INSTALLATION? Yes ☐ No ☐ Customer Notified Yes ☐ No ☐

WATER FOUND: On ☐ Off ☐ Water Left: On ☐ Off ☐ Line Pressure: _____

TEST EQUIPMENT Make _____ Model _____ Serial # _____ Accuracy Verification Date _____

TEST METHOD _____ REMARKS: _____

INITIAL TEST BY _____ CERT. NO. _____ DATE _____
Typed or printed

REPAIRED BY: _____ DATE _____

TEST AFTER REPAIR BY: _____ CERT. NO. _____ DATE _____
Typed or printed

I CERTIFY THE ABOVE TO BE TRUE: Certified: _____
Signature of Certified Tester

Town of Coupeville, Wa

List of Backflow Prevention Assemblies Required under the Water & Sewer Ordinance to Protect Water Distribution System

Customer	Serial #	Location Address	Assembly Location	Haz. Assmt	Equip/Use	Assy Type	Make/Model	Size (in)	Tester's Name	Cert #	Test Date	Comments
2V2 ssociates		202 N Main (Vracin)	Medical Bldg	HIGH	Premise isolation	RPBA						ON PRIOR LIST
l's (Now Jim inslow)	A 016276	537 W. Parker Road	Front yd before Long pt. Meter	MOD	Bet. Two water systems-Coupe & Lg Pt. Customer has both (Long Pt. Side)	DCVA	Febco 805Y	1.00	C King	B1847	1999	
l's (Now Jim inslow)	A 029027	537 W. Parker Road	Front yd after Coupe meter	MOD	Bet. Two water systems-Coupe & Lg Pt. Customer has both (Coupe. Side)	DCVA	Febco 805Y	1.00	C King	B1847	1999	
ig Rock Apts	W 93549	106 S. Main	Vault w. side driveway Miriams	LOW	Fire Supression	DCDA	Wilkins, DCDA	0.75	Tim Bright	B4770	04/27/09	
ig Rock Apts	W 97552	106 S. Main	Vault w. side driveway Miriams	LOW	Fire service	DCDA	Wilkins, DCDA	6.00	Tim Bright	B4770	04/27/09	
lue Goose n	A 00399	702 N. Main	In basement on south wall	LOW	Premise isolation, cistern on property	DCVA	Watts 007 M2 QT	0.75	Clive Defty	B4087	11/30/07	
ambey Apt	A 04858	50 N. Main	Resident store room N wall	LOW	Fire sprinkler system	DCVA	Febco 850	2.00	R. Sigmen	B2226	03/26/02	
ampbell - yler	A 41337	1080 NE Pennington	Next to water meter	HIGH	Premise isolation, cistern on property	RPBA	Watts 009 M3	0.75	Clive Defty	B4087	03/20/09	
oupeville estival Office	355836		Inside bldg, not premise isol.	LOW	Changed to office from brewery	RPBA	975 XL				Re-moved	Was Capt. City Brewery
areage	25270	311 NE Third	Vault near PIV	MOD	Fire sprinkler system	DCDA	Watts 007M1	0.75	Mark Taitano	B4691	04/03/07	
areage	106759	311 NE Third	Mech room, top assembly	HIGH	Premise isolation	RPBA	Watts 909	2.00	Amy Allen	B5004	05/09/08	
areage	110700	311 NE Third	Vault, SE Bldg	LOW	Fire service	DCDA	Watts 709	6.00	Mark Taitano	B4691	04/03/07	
areage	412471	311 NE Third	Mech room, bottom assembly	HIGH	Premise isolation	RPBA	Watts 909	2.00	Amy Allen	B5004	05/09/08	
areage	A 5689 old MK330	311 NE Third	Laundry HW, top assembly	HIGH	Water re-use	RPBA	Combroco 40207A2	1.50	Byron Mutchleer	B4671	06/02/08	
areage	A 5748	311 NE Third	Laundry HW, bottom assembly	HIGH	Water re-use	RPBA	Combroco 40207A2	1.50				

asey's Cove			Well	MOD	Auxil Well	DCVA						ON PRIOR LIST
entral Whidbey Fire	22460	109 N. Main	Upstairs of mech room	HIGH	Domestic water supp.	RPBA	Watts 009	2.50	Mark Taitano	B4691	01/09/09	
entral Whidbey Fire	1061700	109 N. Main	Sprinkler vault next to flag pole	MOD	Fire sprinkler system	DCVA	Watts 774	4.00	Mark Taitano	B4691	01/09/09	
entral Whidbey Fire	09703	109 N. Main	Sprinkler vault next to flag pole	MOD	Fire sprinkler system		Watts 007M2	0.75	Mark Taitano	B4691	01/09/09	
obblestone ottages												
obblestone ottages												
obblestone ottages												
obblestone ottages												
oupe's illage	H08928	107 S. Main, Building - B	Pizza Factory hall closet	HIGH	Domestic water supply	RPBA	Febco 860	1.00	Tim Bright	B4770	04/30/09	
oupe's illage	H13241	107 S. Main, Building - C	Rear of bldg in mech room	MOD	Domestic water and boiler	RPBA	Febco 860	1.00	Tim Bright	B4770	04/30/09	
oupe's illage	W120354	107 S. Main, Building - C	Rear of bldg in mech room	HIGH	Boiler make up water	RPBA	Wilkins 975 XL	0.50	Tim Bright	B4770	04/30/09	
oupe's illage	H08911	107 S. Main, Building - D	Upstairs hall side attic mech room	HIGH	Domestic water supply	RPBA	Febco 860	1.00	Tim Bright	B4770	04/30/09	
oupe's illage	H08924	107 S. Main, Building - F	Basement crawl space far corner	HIGH	Domestic water supply	RPBA	Febco 860	1.00	Tim Bright	B4770	04/30/09	
oupe's illage	1940047	107 S. Main, Building - G	Front flower bed in vault	MOD	Irrigation, Sally's Garden	DCVA	Wilkins 950XL	0.75	Tim Bright	B4770	04/30/09	
oupe's illage	0002221029	107 S. Main	Vault corner of entrance, Coupe'	LOW	Fire Flow	DCDA	Febco 856	6.00	Tim Bright	B4770	04/30/09	
oupe's illage	A013480	107 S. Main	In vault next to entrance	LOW	Fire sprinkler	DCDA	Febco 805YB	0.75	Tim Bright	B4770	04/30/09	
oupeville linic		80 N Main	Medical Bldg	HIGH	Premise isolation	RPBA						
hristiansen, ed	A98182	402 N Main	Near back porch next to meter	HIGH	South building isolation	RPBA	Watts 009-M3 QT	0.75	Ryan Bonner	B5232	01/05/08	
SD #204	W250559 XLD	501 S. Main	HS Vault E. side Voc/Tech bldg	MOD	Irrigation	DCVA	Wilkins 950 XL	0.75	Allen Amy	B5004	09/11/08	

CSD #204	V05139	501 S. Main	HS Vault E. side Voc/Tech bldg	MOD	Irrigation	DCVA	Wilkins 350 ADA	6.00	Allen Amy	B5004	09/11/08	
CSD #204	2139957 XLD	501 S. Main	Vault outside W. side of gym	MOD	Domestic water supply	DCDA	Wilkins 950 XL	0.75	Allen Amy	B5004	08/14/08	
CSD #204	N21749	501 S. Main	Vault outside W. side of gym	MOD	Fire service main	DCDA	Wilkins 350 DA	6.00	Allen Amy	B5004	08/13/08	New 2006
CSD #204	H20637	501 S. Main	W. side gym in hot box in fence	MOD	Fire sprinkler system	DCVA	Febco 850	2.00	Clive Defty	B3807	10/03/07	New 2006
CSD #204	H20638	501 S. Main	N. side Voc/Tech bldg in hot box	MOD	Fire sprinkler system	DCVA	Febco 850	2.00	Clive Defty	B3807	10/03/07	New 2006
CSD #204	H13023	501 S. Main	By W, side Voc/ Tech bldy in vault	HIGH	Irrigation	RPBA	Febco 860	2.00	Allen Amy	B5004	08/14/08	New 2006
CSD #204	721043	6 S. Main	El -Fire sprink vlv rm -e end of bldg	LOW	Fire service/sprinkler	RPBA	Wilkins, 575	4.00	Byron Mutchleer	B4671	08/13/07	
CSD #204	02761 ?	501 S. Main	HS Main Wing Boiler RM	HIGH	Science Lab Isolation	RPBA	Wilkins, 975 XL	2.00	Allen Amy	B5004	08/13/08	New 2006
CSD #204	609313	501 S. Main	HS Main Wing Boiler RM	HIGH	Make up water	RPBA	Watts 909 QT	1.00	Allen Amy	B5004	08/14/08	New 2006
CSD #204	608410	501 S. Main	HS Gym Boiler RM	HIGH	Fire sprinkler system	RPBA	Wilkins, 975 XL	2.00	Allen Amy	B5004	08/14/08	New 2006
CSD #204	2714182	501 S. Main	HS Votech Mech. RM	HIGH	Votech Building Isolation	RPBA	Wilkins, 975 XL	1.00	Clive Defty	B4087	08/23/07	New 2006
CSD #204	A 0245	501 S. Main	MS Fire sprink vlv rm next to kitchen	LOW	Fire service/sprinkler	RPBA	Febco 825Y	4.00	Allen Amy	B5004	08/14/08	
CSD #204	AC 5248	501 S. Main	MS, Fire Sprinker Valve Rm, next to	LOW	Fire sprinkler detector	RPBA	Febco 825Y	0.75	Allen Amy	B5004	08/14/08	
CSD #204	AF 8634	501 S. Main	MS, Janit closet, next to elev.	HIGH	Bathroom hot water supply	RPBA	Febco 825Y	0.75	Allen Amy	B5004	09/11/08	
CSD #204	AG3068	501 S. Main	MS, Janit closet, next to elev.	HIGH	Bathroom water suppl.	RPBA	Febco 825Y	0.75	Allen Amy	B5004	09/11/08	
Davenport, Bob	AC 4896	2201 NE Parker	N side by garage door in ground	HIGH	Livestock drinking tanks	DCVA	Watts 007M1 QT	1.00	Tim Bright	B4770	01/23/09	New 2007
Davenport, Bob	A 62477	2201 NE Parker	In garage N wall right of man door	HIGH	Fire sprinkler system	RPBA	Watts 009 M3QT	0.75	Tim Bright	B4770	01/25/09	New 2007
Dr. Anderson		412 N Main	Dentist	HIGH	Premise isolation	RPBA						ON PRIOR LIST
Dr. Chichowski		21 N Main	Medical Bldg	HIGH	Premise isolation	RPBA						ON PRIOR LIST

Dr. Riederer	15018	31 N Main	Medical Bldg	HIGH	Premise isolation	RPBA	Watts 009 RP	1.00				ON PRIOR LIST
Dr. Zaveruha	1121307	11 N Main	Vault	LOW	Fire service	DCDA	Febco DDCA	6.00				ON PRIOR LIST
Dr. Zaveruha	A 000858	11 N Main	Vault?			DCDA	Febco 805Y	0.75				ON PRIOR LIST
Dr. Zaveruha		11 N Main	Medical Bldg	HIGH	Premise isolation	RPBA						ON PRIOR LIST
ngle Farms	118945		S on Ft Casey	MOD	Premise isolation	DCVA	Hersey, unknown	0.75	C. King	B4688		ON PRIOR LIST
ngle Farms	299253		Near hay shed	MOD	Premise isolation	DCVA	Watts, 007 QT	0.75	C. King	G4688		ON PRIOR LIST
ngle Farms	Not avail		80'W - Ft Casey	MOD	Premise isolation	DCVA	Watts, 007 QT	0.75	C. King	B4688		ON PRIOR LIST
inrow						RPBA						From MB
eller, tephen	2904496	2219 W. Madrona Way	S. side Madrona by Lagoon	HIGH	Water service line routed under lagoon	RPBA	Wilkins 975X	0.75	C. King	B1847	01/01/99	Vera Shannon sold in 1999
sland County	550089	1 NE 6th	Basement Mech RM	LOW	Chiller feed water	RPBA	Watts 909	1.00	Mark Taitano	B4691	04/06/09	
sland County	133702	1 NE 6th	Basement Mech RM	LOW	Building water	DCVA	Watts 709	3.00	Mark Taitano	B4691	03/24/08	
sland County	133702	1 NE 6th	Basement Mech RM		Building water	DCVA	Watts 709	3.00	Mark Taitano	B4691	04/06/09	
sland County	H15056	1 NE 6th	Basement Mech RM	LOW	Boiler make up water	RPBA	FEBCO 825Y	0.75	Mark Taitano	B4691	04/06/09	
sland County	30378	1 NE 6th	Basement Mech RM	LOW	Fire sprinkler system	DCVA	Ames 2000 B	0.75	Mark Taitano	B4691	04/06/09	
sland County	1-256824 03	1 NE 6th	Basement mech RM B113	LOW	Fire sprinkler system	DCDA	Ames 3000 SS	4.00	Mark Taitano	B4691	04/06/09	
sland County	116733	1 NE 7th	Fire sprink valve RM W. Center Bld	LOW	Fire sprinkler system	DCDA	Ames 3000 SS	4.00	Mark Taitano	B4691	04/06/09	
sland County	21048	1 NE 7th	Fire sprink valve RM W. Center Bld	LOW	Fire sprinkler system	DCVA	Ames 2000 B	0.75	Mark Taitano	B4691	04/06/09	
sland County	1839329	1 NE 7th	N wall of bldg in wooden box	LOW	Irrigation	DCVA	Wilkins 950 XLT	2.00	Mark Taitano	B4691	04/06/09	Changed 03/08 old #115865
sland County	155615	1 NE 7th	Rear of Mech RM	HIGH	Boiler make up water	RPBA	Watts 009 M2 QT	1.00	Mark Taitano	B4691	04/06/09	
sland County	125063	101 6th St	L&J Bldg. Basement mech	HIGH	Boiler water	RPBA	Watts 009M2QT	1.00	Mark Taitano	B4691	04/06/09	

sland County	95024	5th & Center	sw of L&J in mtr bx near stop sign	LOW	Irrigation system	DCVA	Watts 007M1QT	1.00	Mark Taitano	B4691	04/06/09	Report says 6th St.
sland County	212036	501 N. Main St.	JD basement mech RM	MOD	Domestic water	RPBA	Watts 909	4.00	Mark Taitano	B4691	04/06/09	
sland County	281171	501 N. Main St.	JD basement mech RM	HIGH	Boiler make up water	RPBA	Watts 009M2QT	1.00	Mark Taitano	B4691	04/06/09	
sland County	2043875	501 N. Main St.	JD basement mech RM	MOD	Fire sprinkler system	DCVA	Wilkins 950 XL	0.75	Mark Taitano	B4691	04/06/09	
sland County	N20290	501 N. Main St.	JD basement mech RM	MOD	Fire sprinkler system	DCDA	Wilkins 350 DA	3.00	Mark Taitano	B4691	04/06/09	
sland County	42233	501 N. Main St.	SE, jail X st near st light in mtr box	LOW	Irrigation system	DCVA	Watts 007M2QT	1.50	Mark Taitano	B4691	04/06/09	Report said ??233 for serial
sland County	0004110929	101 6th St	L & J Bldg. Basement mech	LOW	Fire sprinkler system	DCDA	FEBCO 856	4.00	Mark Taitano	B4691	04/06/09	
sland County	013865	101 6th St	L&J Bldg. Basement mech	HIGH	Fire sprinkler system	DCVA	Febco 805 YB	0.75	Mark Taitano	B4691	04/06/09	
sland County		502 N Main	Kaul Bldg									
sland County		410 N. Main	Nursing Services									
sland County	H 04601	105 NW First St	Compass Health	HIGH	Premise Isolation	RPBA	Febco 860	0.75	Mark Taitano	B4691	04/06/09	
ordon, Leo	10747	2229 W. Madrona Way	S side Madrona by Kenny's Lag. In	HIGH	residential water line routed under lagoon	RPBA	Watts 009-M2-QT	0.75	Tim Bright	B4770	03/09/09	
Keeler/Mark		613 NE 4th										
ang, Pat	11420	2230 W. Madrona Way	S. side Madrona by Lagoon	HIGH	Serv Pipe under lagoon	RPBA	Watts 009 M2 QT	0.75	Tim Bright	B4770	03/18/09	
M-D Associates		77 N Main	Medical Bldg	HIGH	Premise isolation	RPBA						ON PRIOR LIST
Mueller, Lauren	83292	2107 W. Madrona Way	At meter	HIGH	Premise isolation, well and stock water tanks	RPBA	Watts 009 M3 QT	0.75	Tim Bright	B4770	07/27/09	
Peaceful Valley H.O.A.	25737	NE Corner of 6th St.	Vault back corner of Condo 302	LOW	Residential from any possible contamination	DCDA	Watts 007 M1	0.75	C King	B1847	1999	
Peaceful Valley H.O.A.	111026	NE Corner of 6th St.	Vault back corner of Condo 302	LOW	Residential from any possible contamination	DCDA	Watts 709 DCDA	4.00	C King	B1847	1999	
Miriams	H21765	200 S. Main	Out front by sidewalk	HIGH	Premise isolation	RPBA	FEBCO 860	1.00	Clive Defty	B4087	05/04/06	New 2006
Oyster Catcher	104799	901 NW Grace	Store room	HIGH	Premise isolation	DCVA	Appollo	0.50	Byron Mutchleer	B4671	12/01/08	New 2007

Penn Cove Veterinary		404 S Main	Veterinary	HIGH	Premise isolation	RPBA						ON PRIOR LIST
Port of Coupeville	9703281424	24 NW Front	Under Port Office	LOW	Fire Sprinkler System	DCDA	FEBCO 856	4.00	Mark Taitano	B4691	12/12/08	
Port of Coupeville	A 002578	26 NW Front	Under Port Office	LOW	Fire Sprinkler System	DCVA	FEBCO 805YB	0.75	Mark Taitano	B4691	12/12/08	
Shelton, Winnie	109246	2210 W. Madrona Way	S. side Madrona by Lagoon	HIGH	residential water line routed under lagoon	RPBA	Watts, 009 M2 QT	0.75	Tim Bright	B4770	06/25/09	
Sherman/ Bishop Farms	64705	154,201, or 302 S. Ebey	At meter	MOD	Premise isolation - Farm	DCVA	Watts, 709	1.00	C. King	B4688		ON PRIOR LIST
Tandecki, Leo	249976	1202 NE Burnham Pl.	Garage by booster pump	HIGH	Premise isolation, booster pump.	RPBA	Watts, 009 M2 QT	1.00	Tim Bright	B4770	01/22/09	
Town of Coupe	59879	WWTP	WWTP Mech Rm, W. wall, R of d-dr	HIGH	Lab isolation	RPBA	Watts 009-M3 QT	0.75	Tim Bright	B4770	05/13/09	
Town of Coupe		WWTP		SEVERE	Reclaim makeup	AG	Req'd in 1996	None				ON PRIOR LIST
Town of Coupe	608296	613 NE Lauren Street	Lift Station Pump House	HIGH	Wash Water Isolation	RPBA	Watts 909 QT	1.00	Tim Bright	B4770	09/09/08	New Installation 9/9/08
VGH	577		Recovery unit	HIGH	Ice machine	RPBA	Watts 009	0.50	R. Sigmen	B2226		Verify
VGH	162049	101 N. Main	CCU Med room, under ice mach.	HIGH	Water to ice machine	RPBA	Watts 009	0.50	Mark Taitano	B4691	01/06/09	
VGH	19747	101 N. Main	Basemt sterilizers, E end, central	HIGH	Cold water to sterilizers	RPBA	Watts 009 QT	1.00	Mark Taitano	B4691	01/06/09	
VGH	45617	101 N. Main	Upstair - Surgery	HIGH	Sterilizer-Steris Machine	RPBA	Watts 009 QT	0.50	Mark Taitano	B4691	01/06/09	
VGH	45625	101 N. Main	Surgery upstairs	HIGH	Sterilizer	RPBA	Watts 009 QT	0.50	Mark Taitano	B4691	01/06/09	
VGH	45637	101 N. Main	Upstairs - Surgery	HIGH	Sterilizer	RPBA	Watts 009 QT	0.50	Mark Taitano	B4691	01/06/09	
VGH	45638	101 N. Main	Basemt boiler rm	?	Cold water feed to bldg heat	RPBA	Watts 009 QT	0.50	R. Sigmen	B2226	12/30/02	Verify
VGH	45640	101 N. Main	X-Ray photo devel rm	HIGH	Developer machine	RPBA	Watts 009 QT	0.50	Mark Taitano	B4691	12/11/07	
~~VGH~~	~~45643~~	~~101 N. Main~~	~~Radiology~~	~~HIGH~~	~~X-Ray developer machine~~	~~RPBA~~	~~Watts 009 QT~~	~~0.50~~	~~Mark Taitano~~	~~B4691~~	01/06/09	Removed from service
VGH	45648	101 N. Main	Surgery HAMO	HIGH?	Cold water (middle)	RPBA	Watts 009 QT	0.50	Mark Taitano	B4691	01/06/09	
VGH	45651	101 N. Main	Surgery HAMO	HIGH?	RO water to HAMO	RPBA	Watts 009 QT	0.50	Mark Taitano	B4691	01/06/09	

/GH	45652	101 N. Main	Surgery HAMO	HIGH?	Hot water to HAMO	RPBA	Watts 009 QT	0.50	Mark Taitano	B4691	01/06/09	
/GH	63498	101 N. Main	Central supply basement	HIGH?	HAMO machine - hot water	RPBA	Watts 009 QT	0.50	Mark Taitano	B4691	01/06/09	
/GH	63847	101 N. Main	Central supply basement	HIGH?	HAMO machine - Cold water	RPBA	Watts 009 QT	0.50	Mark Taitano	B4691	01/06/09	
/GH	64586	101 N. Main	Central supply basement	HIGH?	HAMO machine - R.O.	RPBA	Watts 009 QT	0.50	Mark Taitano	B4691	01/06/09	
/GH	81500	101 N. Main	Basemt boiler rm	HIGH	R.O. Boiler feed	RPBA	Watts 009 QT	0.75	Mark Taitano	B4691	01/06/09	
/GH	81508	101 N. Main	Basemt boiler rm	HIGH	Water to RO syst.	RPBA	Watts 009 QT	0.75	Mark Taitano	B4691	01/06/09	
/GH	100462	101 N. Main	Surgery upstairs	HIGH	Sterilizer-Steris Machine	RPBA	Watts 009 QT	0.50	Mark Taitano	B4691	01/06/09	
/GH	100846	101 N. Main	Basement boiler room west	HIGH	Feed to propane boiler	RPBA	Watts 009 QT	0.75	Mark Taitano	B4691	01/06/09	
/GH	130328	101 N. Main	Laboratory	HIGH	R.O. Water to lab	RPBA	Watts 009 QT	0.50	R. Sigmen	B2226		Verify
/GH	1347158	101 N. Main	S side bldg in fire service vault	MOD	Fire sprinkler system	DCDA	Febco 806 YD	6.00	Mark Taitano	B4691	01/09/09	
/GH	136173	101 N. Main	Basemt boiler rm	HIGH	Premise isolation	RPBA	Watts, 909	2.50	R. Sigmen	B2226	12/30/02	Verify
/GH	158326	101 N. Main	Dining rm @ soda mach.in cabinet	HIGH	Soda machine	RPBA	Watts 009QT	0.50	Mark Taitano	B4691	01/06/09	
/GH	158547	101 N. Main	Dining rm in cabinet under unit	HIGH	R.O. water to ice machine	RPBA	Watts 009 QT	0.50	Mark Taitano	B4691	01/06/09	
/GH	159397	101 N. Main	Medical/surgery	HIGH	Ice machine	RPBA	Watts 009 QT	0.50	Mark Taitano	B4691	01/06/09	
/GH	160182	101 N. Main	PACU Ice machine	HIGH	Ice machine	RPBA	Watts 009 QT	0.50	Mark Taitano	B4691	01/06/09	
/GH	L 16273	101 N. Main	Basement boiler room	HIGH	Domestic water supply	RPBA	Wilkins 375	3.00	Mark Taitano	B4691	01/06/09	
/GH	160328	101 N. Main	Laboratory	HIGH	R.O. Water to lab	RPBA	Watts 009 QT	0.50	Mark Taitano	B4691	01/06/09	
~~/GH~~	~~179442~~	~~101 N. Main~~	~~Radiology~~	~~HIGH~~	~~X-Ray developer machine~~	~~RPBA~~	~~Watts 009 QT~~	~~0.50~~	~~Mark Taitano~~	~~B4691~~	01/06/09	Developer removed
/GH	182562	101 N. Main	Basement boiler room	HIGH	Cold water feed to bldg heat	RPBA	Watts 009 QT	0.50	Mark Taitano	B4691	01/06/09	
~~/GH~~	~~366061~~		~~Pool mech rm~~	~~HIGH~~	~~Premise isolation~~	~~RPBA~~	~~Watts, 909QT (replaced 95)~~	~~1.00~~	~~R. Sigmen~~	~~B2226~~		Replaced by 00147, 1/16/2003

/GH	532249	101 N. Main	Penthouse on roof, s. wall	HIGH	Chill water makeup	RPBA	Watts 909	0.75	Mark Taitano	B4691	01/06/09	
/GH	9311067	101 N. Main	Boiler rm - basement	HIGH	Premise isolation	RPBA	Hersey, 6 CM	2.50	Mark Taitano	B4691	01/06/09	
/GH	00147	101 N. Main	Pool pump room	HIGH	Pool water feed	RPBA	Watts 009 QT	0.50	Mark Taitano	B4691	01/06/09	New valve; replaces old
/GH	91031	101 N. Main	Kitchen under counter	LOW	Hotwater to dishwasher	RPBA	Watts 009 M3	0.75	Mark Taitano	B4691	01/06/09	This is new installation.
/GH	AC 1190	101 N. Main	S. side bldg fire svc vault	LOW	Fire sprinkler detector	DCVA	Febco 805Y	0.75	Mark Taitano	B4691	01/09/09	
~~/GH~~	~~B 47158~~	~~101 N. Main~~	~~S. side bldg fire svc vault~~	~~LOW~~	~~Fire sprinkler syst~~	~~DCDA~~	~~Febco 806 YD~~	~~6.00~~	~~R. Sigmen~~	~~B2226~~	~~12/30/02~~	Changed serial # to 1347158

re service=Fire flow=Fire -- detector
re service/sprinkler

Washington State Department of Health

Office of Drinking Water

Cross-Connection Control Program
BACKFLOW INCIDENT REPORT FORM

Note: This form is intended to be used for compliance with WAC 246-290-490(8)(g).

Part 1: Public Water System (PWS) Information

PWS ID:	PWS Name:	County:

Part 2: Backflow Incident Information

A. Incident Identification

Incident Date:	Time of Incident:	Incident ID (DOH Use):

B. Information on Premises where Backflow Originated

Name of Premises:				Type:
Contact Name:				Title:
Address:				Phone:
City:	St: WA	Zip:	Email:	
Type or Description of Premises (Table 9 Type*, if applicable):				
Most Recent Hazard Evaluation Prior to Incident Date: None ☐				Hazard Level:
				Premises Isolation Required by PWS?:
PWS Relies on *In-premises Protection* for this Service ☐				Type of Backflow Preventer Required:
Other Evaluation Information:				

*See WAC 246-290-490(4)(b)(i)

C. Method of Discovery of Backflow

How was the backflow discovered? (Check all that apply.)	Direct Observation ☐ Meter Running Backwards ☐ Water Use Decrease ☐ Water Quality Monitoring ☐ Disinfectant Residual ☐ Water Quality Complaint ☐ Illness Complaint ☐ Result of Investigation ☐ Other (Describe):
Incident Reported By	PWS Personnel ☐ Premises Owner ☐ Backflow Assembly Tester ☐

D. Contaminant Information

Type of Contaminant (check all that apply):	Microbiological ☐ Chemical ☐ Physical ☐
Describe (name of organism, chemical, etc.):	Description (Attach lab analysis or MSDS, if available):

E. Extent and Effects of Contamination

Extent of contamination:	
No. of connections affected: Residential:	Non-Residential:
Population affected or at risk: Residential:	Non-Residential:
No. of water quality complaints:	Describe water quality complaints:
No. of illnesses reported:	Describe illness or irritation (Specific illnesses, if known):
Physical irritation cases reported:	

Part 3: CCC Information at Backflow Site

A. Source of Contaminant

Source of contaminant or fixture type (check all that apply):	Air conditioner/heat exchanger	☐	Industrial/commercial process water/fluid.....	☐
	Auxiliary water supply	☐	Medical/dental fixture	☐
	Beverage machine	☐	Reclaimed water system.....	☐
	Boiler, hot water system	☐	Swimming pools, spa	☐
	Chemical injector/aspirator	☐	Wastewater (sewage) system	☐
	Fire protection system	☐	Other (specify):	☐
	Irrigation system (PWS supplied)	☐	.....	☐

B. Water System Distribution Main Status in Vicinity of Backflow Incident

Pressurization (check all that apply):	Gravity ☐ Pump ☐ Emergency generator available ☐ Normal pressure at vicinity psi (if range, enter lower end of range)
Pipe material and size:	Duct. iron ☐ Cast iron ☐ PVC ☐ A/C ☐ Other (Specify) Size (Inches)
Main/pressure status at time of incident (check all that apply):	Normal ☐ Main break ☐ Scheduled water shutoff by PWS ☐ Unscheduled/emergency shutoff by PWS ☐ Fire fighting ☐ Power outage ☐ Source/plant outage ☐ Other high usage ☐ Unknown ☐ Other (Specify) Pressure at time of incident, if known psi
Other information:	

C. Cause of Backflow

Underlying cause of backflow:	
Describe causes and circumstances leading to backflow:	

D. Backflow Preventer Installation Status at Site of Backflow

Note:

- If the premises identified in Part 2 A was protected by a premises isolation backflow preventer, AND the contaminant entered the distribution system, complete the table for the premises isolation preventer.
- In all other cases, complete the table for the backflow preventer installed at the fixture or for in-premises protection.

Installation status (check one box):	None installed ☐ Installed for: Type installed (if any):
Installation condition (check all that apply):	N/A (None installed) ☐ Approved correct assembly properly installed ☐ Not commensurate with degree of hazard ☐ Improperly installed ☐ Unapproved assembly ☐ Improperly protected bypass present ☐ Not inspected/tested/maintained within last 12 months prior to incident ☐
Other information on installation condition:	

E. Backflow Preventer Condition at Site of Backflow

Backflow preventer information:	None installed ☐ Make: Model: Size: Serial no.: Date installed: DOH or USC-approved when installed?
Backflow preventer working status *after* backflow incident. Inspection and test information [required by WAC 246-290-490(7)(b)]. Attach test report.	No backflow preventer installed ☐ None performed ☐ Date of test/inspection: Passed test or inspection ☐ Failed test or inspection ☐ Did failure allow backflow to occur through preventer? If "yes," please explain:
Preventer failure information, if applicable (check all that apply)	Fouled Check ☐ Debris ☐ Warped Seat ☐ Weather-related damage ☐ Other
Backflow preventer working status *prior* to backflow incident. Most recent information inspection and test information. Attach test report(s), if available.	No backflow preventer installed ☐ None on record ☐ Date of test/inspection: Passed test or inspection (whether or not repaired) ☐ Failed test or inspection, no repairs made ☐ Other information:

Part 4: Corrective Action

Action taken to restore water quality (check all that apply):	No action ☐ Flushed/cleaned mains ☐ Flushed/cleaned plumbing ☐ Disinfection ☐ Other treatment ☐ Describe: Replaced mains ☐ Replaced plumbing ☐ Other:
Action ordered to correct cross-connection situation (check all that apply): **Check if accomplished ☐**	No action ☐ Eliminate cross-connection ☐ Remove by-pass ☐ Type of **new** backflow preventer to be installed: To be installed for: Type of **replacement** preventer to be installed: Repair or re-plumb existing preventer ☐ Other:
Required notifications* (check all that apply):	DOH ☐ Local Health Agency ☐ Local Administrative Authority ☐ Issued by end of next business day:
Other notifications (check all that apply):	Population at risk ☐ Public notification (per DOH regs) ☐ Boil Water Advisory ☐ Other (describe):
Other enforcement or corrective actions:	Describe:

*These are required in accordance with WAC 246-290-490(8)(f).

Part 5: Cost of Backflow Incident

Item	PWS Personnel Hours Expended	Cost to PWS ($)	Cost to Premises Owner ($)
Investigation			
Restoration of water quality			
Correction of cross-connection situation			
Litigation and/or settlement			
Other not included in above			

Part 6: Further Narrative and Comments

Public Water Systems may attach a more extensive report on this incident. Information such as pictures, sketches, newspaper or journal articles, epidemiological reports, water quality analyses, etc., will be greatly appreciated. Information may also be submitted in electronic form.

Part 7: Form Completion Information

Note Form should be completed by a person certified as a Cross-Connection Control Specialist

I certify that the information provided in this Backflow Incident Report is complete and accurate to the best of my knowledge.		
CCC Program Mgr Name (print):		Title:
Signature:	CCS. Cert No:	Date:
Phone:	E-mail:	
I certify that the information provided in this report accurately represents the information available pertaining to this backflow incident.		
PWS Mgr Name (Print):		Title:
Signature:	Op. Cert No:	Date:

Send completed form to:

Washington State Department of Health
Office of Drinking Water – CCC Program Manager
P O Box 47822
Olympia, WA 98504-7822

By email to: terri.Notestine@doh.wa.gov or cccprogram@doh.wa.gov

Thank you for completing this report.

If you have any questions, comments or suggestions regarding this form, please send them to DOH at cccprogram@doh.wa.gov

Supplement for Additional Backflow Preventers at Backflow Incident Site

Note:
If there are more than one backflow preventer at the backflow incident site, use these tables to enter information for these preventers. See next page for another set of tables.

D-1. Backflow Preventer Installation Status at Site of Backflow

Description, Location or other identification of backflow preventer	
Installation status (check one box):	None installed ☐ Installed for: Type installed (if any):
Installation condition (check all that apply):	N/A (None installed) ☐ Approved correct assembly properly installed ☐ Not commensurate with degree of hazard ☐ Improperly installed ☐ Unapproved assembly ☐ Improperly protected bypass present ☐ Not inspected/tested/maintained within last 12 months prior to incident ☐
Other information on installation condition:	

E-1. Backflow Preventer Condition at Site of Backflow

Enter condition information for backflow preventer identified in table D-1

Backflow preventer information:	None installed ☐ Make: Model: Size: Serial no.: Date installed: DOH or USC-approved when installed?
Backflow preventer working status *after* backflow incident. Inspection and test information [required by WAC 246-290-490(7)(b)]. Attach test report.	No backflow preventer installed ☐ None performed ☐ Date of test/inspection: Passed test or inspection ☐ Failed test or inspection ☐ Did failure allow backflow to occur through preventer? If "yes," please explain:
Preventer failure information, if applicable (check all that apply)	Fouled Check ☐ Debris ☐ Warped Seat ☐ Weather-related damage ☐ Other
Backflow preventer working status *prior* to backflow incident. Most recent information inspection and test information. Attach test report(s), if available.	No backflow preventer installed ☐ None on record ☐ Date of test/inspection: Passed test or inspection (whether or not repaired) ☐ Failed test or inspection, no repairs made ☐ Other information:

Supplement for Additional Backflow Preventers at Backflow Incident Site (Continued)

D-2. Backflow Preventer Installation Status at Site of Backflow

Description, Location or other identification of backflow preventer	
Installation status (check one box):	None installed ☐ Installed for: Type installed (if any):
Installation condition (check all that apply):	N/A (None installed) ☐ Approved correct assembly properly installed ☐ Not commensurate with degree of hazard ☐ Improperly installed ☐ Unapproved assembly ☐ Improperly protected bypass present ☐ Not inspected/tested/maintained within last 12 months prior to incident ☐
Other information on installation condition:	

E-2. Backflow Preventer Condition at Site of Backflow

Enter condition information for backflow preventer identified in table D-2

Backflow preventer information:	None installed ☐ Make: Model: Size: Serial no.: Date installed: DOH or USC-approved when installed?
Backflow preventer working status *after* backflow incident. Inspection and test information [required by WAC 246-290-490(7)(b)]. Attach test report.	No backflow preventer installed ☐ None performed ☐ Date of test/inspection: Passed test or inspection ☐ Failed test or inspection ☐ Did failure allow backflow to occur through preventer? If "yes," please explain:
Preventer failure information, if applicable (check all that apply)	Fouled Check ☐ Debris ☐ Warped Seat ☐ Weather-related damage ☐ Other
Backflow preventer working status *prior* to backflow incident. Most recent information inspection and test information. Attach test report(s), if available.	No backflow preventer installed ☐ None on record ☐ Date of test/inspection: Passed test or inspection (whether or not repaired) ☐ Failed test or inspection, no repairs made ☐ Other information:

BACKFLOW INCIDENT RESPONSE PLAN
(Supplement to the Emergency Plan)
{from 2003 WSP}

A. General

This backflow incident response plan is a supplement to the Emergency Plan of the **TOWN OF COUPEVILLE** hereinafter referred to as the Purveyor.

Whenever the initial evaluation of a water quality complaint indicates that a backflow incident has occurred (potable water supply has been contaminated/polluted), may have occurred, or the reason for the complaint can not be explained as a "normal" aesthetic problem, a backflow incident investigation should be immediately initiated. Whenever a water main break or power outage (pumped systems) causes a widespread loss of water pressure (backsiphonage conditions) it is prudent to initiate a check of distribution water quality as a precursor to the need for a backflow incident investigation. It is wise to be conservative when dealing with public health matters.

Within 24 hours of knowledge of any incident of possible contamination of the potable water supply, both in the distribution system and/or in the customer's plumbing system, the state and local county personnel should be notified (see list of emergency telephone numbers at the beginning of the M. & O. Manual).

A backflow incident investigation is often a team effort. The investigation should be made or (initially) lead by the certified Cross Connection Control Specialist employed by the Purveyor. The investigation team should include local health and plumbing inspectors.

General guidance on how to respond to a backflow incident may be obtained from the manual BACKFLOW INCIDENT INVESTIGATION PROCEDURES, First Edition, 1996, published by the Pacific Northwest Section, American Water Works Association, P. O. Box 19581, Portland, Oregon, 97280, telephone (877) 767-2992 (toll free).

B. Short-List of Tasks

The following points are included for initial guidance for dealing with a backflow incident; the above referenced manual BACKFLOW INCIDENT INVESTIGATION PROCEDURES should be consulted as soon as possible.

1) As soon as possible, notify customers not to consume or use water. Start the notification with the customers nearest the assumed source of contamination (usually the customer(s) making the water quality complaint).

   The customer should be informed about the reason for the backflow incident investigation, and the Purveyor's efforts to restore water quality as soon as possible. State that the customer will be informed when he may use water, the need to boil water used for consumption until a satisfactory bacteriological test result is obtained from the lab, etc.

Where a customer cannot be contacted immediately, the Purveyor shall place a written notice on the front door handle, and a follow-up visit will be made to confirm that the customer received notice about the break and possible contamination of the water supply.

2) Give consideration to the distribution system as a potential source of the contaminant (e.g., air valve inlet below ground).

3) Do not start flushing the distribution system until the source of contamination is identified. Flushing may aggravate the backflow situation, and will likely remove the contaminant before a water sample can be collected to fully identify the contaminant.

4) Conduct a house-to-house survey to search for the source of contamination and the extent that the contaminant has spread through the distribution system. A check of water meters may show a return of water (meter running backward).

5) Isolate the portions of the system that are suspected of being contaminated by closing isolating valves; leave one valve open to ensure that positive water pressure is maintained throughout the isolated system.

6) Be sure to notify all affected customers in the isolated area, then the other customers in the system.

7) The public health and plumbing authorities should deal with all customers that may have consumed the contaminant, or had their plumbing systems contaminated.

8) Develop and implement a program for cleaning the contaminated distribution system.

9) For the customer where a cross-connection responsible for the system contamination is located, the Purveyor should discontinue water service until the Purveyor ordered corrective action is completed by the customer.

Identification of the source and type of contaminant, and cleaning of a distribution system could take several days.

Most chemical or physical contaminants can be flushed from the water distribution system or customer's plumbing system with adequate flushing velocity. This may not be the case where scale and corrosion deposits (e.g., tuberculation on old cast iron mains) provides a restriction to obtaining adequate flushing velocity, or a chemical deposit or bacteriological slime (biofilm) on which the chemical contaminant may adhere.

To remove a chemical or physical contaminant, it may be necessary to provide a physical cleaning, using foam swabs (pigs), and/or to alter the form or the chemical contaminant, e.g., through oxidation using chlorination, or addition of detergents.

When adding any chemical (including chlorine) to remove a contaminant, it is essential that the chemistry of the contaminant is fully understood. The wrong chemical reaction could make the contaminant more toxic, more difficult to remove, or both.

Where both a chemical and bacteriological contamination has occurred, disinfection should follow the removal of the chemical contaminant.

Where any bacteriological contamination is suspected, field disinfection should be done. To disinfect water mains using the "slug" or "continuous flow" method, a field unit should be used for chlorine injection, such as a chemical feed - metering or proportioning pump for sodium hypochlorite.

Appendix P

Wellhead Protection Plan

WELLHEAD PROTECTION PLAN

This Plan was incorporated into the 1997 Water System Plan. The only changes made in the 2003 Water System Plan were for Well No. 7 (replacement well for Well No. 5) and reformatting to conform to the text style of the 2003 Water System Plan. The changes made since 2003 was inclusion of Well No. 1-06 (drilled in the Fort Casey Well field). The wellhead protection radius for the Fort Casey Well Field was not changed by the addition of Well No. 1-06; the assumed annual withdrawal in the calculation of the wellhead protection radius did not change.

A. REQUIREMENT FOR PROGRAM

Section 1428 of the 1986 Amendments to the federal Safe Drinking water Act mandates that every state develop a wellhead protection program. The Washington Department of Health is designated lead agency for wellhead protection program development and administration. The Safe Drinking Water Act requires that all federally defined public water systems (Group A systems) using groundwater as their source implement a wellhead protection program. The minimum elements of a program required by the Washington Department of Health are:

- Make a susceptibility assessment of each well to contamination through poor construction, lack of a confining layer (e.g., clay), etc.
- Calculate the delineation for each well of the time of travel boundaries (1, 5, and 10 year) of a potential contaminant in groundwater. The 10-year travel boundary is the wellhead protection area (WHPA) boundary.
- Make a vulnerability assessment of all actual and potential groundwater contamination sources located within the delineated WHPA boundary.
- Develop a wellhead protection management program that includes the following:
    - **Public education** to increase awareness of the threats of groundwater contamination; the program must include all owners/operators of actual or potential sources of contamination within the WHPA boundaries.
    - **Monitoring** for activities that contribute to the risk of groundwater contamination, e.g., underground commercial storage tanks, hazardous waste transportation and disposal, etc.
    - **Water conservation** to reduce the rate of [potential] contaminant transportation in groundwater.
    - **Regulations** to control the application, transportation and disposal of hazardous wastes (chemicals and sewerage) that may contaminant groundwater, and other activities that may increase the susceptibility of aquifer contamination (e.g., private wells, septic tanks)

- **Water quality monitoring** of the raw water supply to provide early warning of groundwater contamination.

- Develop a contingency plan for alternate water supplies.

- Inclusion of public participation while the program is developing.

B. PROGRAM OBJECTIVE

The objective of the wellhead protection program are:

1) To reasonably reduce the risk of contamination of the groundwater supplying the utility's well sources, and

2) With other utilities, cooperated and support the Island County aquifer protection program.

C. RELATED PROGRAMS

The above noted components of a wellhead protection program overlap the activities of other Town and Island County programs. These activities can be summarized as follows:

- The disposal of chemicals in public sewers is regulated by the Town through the Water and Sewer Ordinance (No. 526). The regulation of matter to be excluded from public sewers is mandated, in part, by the National Pollutant Discharge Elimination System (NPDES) permit for the operation of the Town's wastewater treatment plant.

- Illicit discharges to stormwater drainage systems is regulated by the Town through the Stormwater Management Ordinance (No. 500).

- The disposal of hazardous chemicals in general, is regulated by Island County, Chapter 8.08A through the exercise of the Board of Health function established through Chapter 70.05 of the Revised Code of Washington. The regulations include household hazardous waste and moderate-risk waste collection and storage.

- Groundwater resource (aquifer) protection regulations are enforced by Island County, Chapter 8.09.

- On-site sewerage disposal systems are regulated by Island County, Chapter 8.07B and by the Town through the Water and Sewer Ordinance (No. 526).

D. PROGRAM OPERATION

Management and Inspection

The above new and existing programs for the regulation of the disposal of hazardous wastes and other matters, include the common activities of inspection, education and enforcement. For efficiency, and greater public understanding of the need to comply with regulations, the Town should coordinate whenever possible all related regulatory actions involving private property owners. The Town's Stormwater Management Ordinance establishes the position of "Director" to administer the ordinance. The "Director" responsibilities are now assigned to the Town's Building Inspector/Public Works Director position.

The coordination of private property inspection is assigned to this position (Building Inspector). For activities under Island County jurisdiction within the Town limits, the coordination should include joint inspection with County staff, and/or the County's timely reporting of activities to the Town.

Public Involvement and Education

Development of the program included public involvement through the establishment of an Advisory Committee, consisting of the mayor, two council members, representatives from the community, the WSU Beach Watchers, and town staff.

Enforcement of regulations was preceded by public education. In some instances, where inspection of all property is not cost effective, public education will be the primary means of obtaining compliance with regulations. For example, the residential "best management practices" in the *Stormwater Program Guidance Manual for the Puget Sound Basin* recommends public education for "good housekeeping" practices.

The public education program completed to date, and to be continued by the WSU Beach Watchers, includes following:

- The development of an educational display that features photographs depicting different forms of pollutants. It gives solutions and alternatives to use of common household "hazardous" chemicals. The display was first used at the Penn Cove Water Festival in May, 1995. It will continue to be used at other public events.

- Because the display is too big for some places, a smaller table-top display was also developed. The smaller display has been set up at the Town library, local banks, etc.

- Several brochures have been developed or were obtained for distribution at the above displays, and at Town Hall. These include:

    - Construction Best Management Practices
    - Stormwater Runoff Information
    - Informational Quiz (for schools)
    - Business & Household Hazardous Waste (County's Solid Waste Program)

- A series of evening lectures by the WSU Beach Watcher's "Home-Asyst" program included presentations on watershed and wellhead protection, and hazardous waste disposal.

A public information and education program was developed under the Town's Integrated Stormwater Management Plan by the WSU Beach Watchers program. The program is ongoing, utilizing the volunteer efforts of the Beach Watcher organization. The Town's ongoing monitoring of the public information and education program is assigned to the "Director" position identified in the Stormwater Management Ordinance.

Delineation and Inventory

The wellhead protection areas were initially delineated using the "Calculated Fixed Radius" method set forth in the DOH "*Ground Water Contamination Susceptibility Assessment Survey Forms*", (see attached). For the in-Town wells (Wells #1, 4, 6 and 7) the delineation area for inspection for sources of contamination was extended to the entire area of the Town. This was expedient for the joint inspection undertaken for the Integrated Stormwater Management Plan.

A subsequent preliminary delineation of the protection area for the Fort Casey Well Field was made by the Town's hydrogeologist, AGI Technologies, using the EPA analytical model GPTRAC to define the capture zone. [1] The hydrogeologist will refine this analysis as the Fort Casey Well Field redevelopment work continues. Much of the 6-month and one-year capture zones fall within the 55 acre watershed area owned by the Town.

The initial inventory of potential sources of groundwater contamination in and around the delineated wellhead protection areas was made using the DOH "Ground Water Contamination Susceptibility Assessment Survey Forms" (see attached). The "other" potential sources (Part V of the form) within the ten-year time of travel were identified based on the lists included in the Washington State publication *"Wellhead Protection Program"*, December 1993, Tables 2 and 3.

The work to date on addressing the most serious sources of potential contaminants has been limited to the investigating the former oil storage facility close to Well #1.

The completion of a detailed inventory of potential sources of contamination was delayed by the recent vacancy of the Town's public works administrator/building inspector position. The program will continue when this position is filled.

---

1 See report "Potential Impacts of Proposed Increase in Withdrawals from Fort Casey Well Field", May 6, 1996, AGI Technologies

Contingency Plan

The Town has two emergency sources: Well # 1 and Well # 6. Both wells have capacity approximately equal to either of the in-Town operating wells (Well #4 and Well #7), and higher capacity than the current Fort Casey Well Field production.

Based on the past pump tests to stress the aquifer [(2)], Well # 1 is capable of continuously operation for five weeks before a noticeable change of water quality (increased chloride levels) occurs. Well # 6 is capable of operation as lead source for more than four months before any significant increase in chloride level occurs. Either well can be operated for a longer period, since chloride is a secondary contaminant (not a significant health concern). For prevention of sea water intrusion, the previous pump tests have demonstrated that the chloride levels returned to base line levels after cessation of the pump tests. The water from both emergency sources is chlorinated. The water from Well # 1 is chlorinated at the in-town water treatment plant.

The contingency plan for the detection of a contaminant in a well supply, include the following:

1) Implement the Town's Water Shortage Response Plan to reduce water demand,

2) Place Well #6 and then Well #1 into operation to compensate for the lost source of supply,

3) Assess the impact of the contaminant on water quality; determine if a change in water treatment (oxidation followed by filtration) will allow the continued use of the contaminated well, and if necessary

4) Proceed with the acquisition of a replacement well, utilizing condemnation procedures if required.

The aquifer in the uplands area southeast of Town (outwash sand) has ample recharge for additional sources of withdrawal to replace either the in-Town well field or the Fort Casey Well Field [(3)]. The cost to connect and develop a 200 gpm well source in this area, including land purchase and transmission main, is estimated in the range of $400,000. The Town has the resources to obtain short-term financing for this level of expenditure.

---

2 See reports "Well #6 Ground Water Evaluation", March 15, 1995, AGI Technologies, and "Wells 1 and 4 Analysis", August 25, 1993, AGI Technologies

3 See report "Town of Coupeville Aquifer Evaluation at the Fort Casey Well Field, Final Report", April 21, 1995, AGI Technologies

Spill Response Plan

The Town relies upon the Island County Fire District No. 5, and the Island County Solid Waste Department (hazardous material coordinator) to be the lead agencies in spill response. It is assumed that the qualifications of these agencies, and their incident and spill response plans are suitable for the protection of the wells.

E. PROGRAM SCHEDULE

Task	Scheduled Completion
Public participation	completed
Susceptibility assessment	completed
Initial delineation of WHPA	completed
Refined delineation of WHPA	after 2014
Initial vulnerability assessment	completed
Detailed vulnerability assessment	after 2014
Education program development	completed
Monitoring	ongoing
Contingency plan	completed
Development of regulations	completed
Spill response	completed

F. REFERENCE MATERIAL

The following publications should be retained by the utility as references for its wellhead protection program:

- *"Wellhead Protection Program"*, December 1993, Washington Department of Health
- *"Protecting Local Ground-Water Supplies Through Wellhead Protection"*, May 1991, US Environmental Protection Agency (publication EPA 570/9-91-007)

Appendix Q

Water Quality Monitoring Plan

STATE OF WASHINGTON
DEPARTMENT OF HEALTH
OFFICE OF DRINKING WATER
PO BOX 47822 • Olympia, Washington 98504-7822
TDD Relay Service: 1-800-833-6388

March 2009

Subject: **WATER QUALITY MONITORING REPORT FOR 2009**

Dear Water System Manager/Purveyor:

Enclosed is your water system's Water Quality Monitoring Report (WQMR) for 2009. The WQMR was developed to help you keep track of the source-specific water quality monitoring requirements for your water system throughout the year 2009.

Important Note: ***Please pay close attention to your synthetic organic chemical (SOC) monitoring requirements this year.*** We have changed the way we are granting organic waivers for the 2008-2010 monitoring period. The biggest impact will be on SOC sampling. We are glad to have saved water systems money and still protected public health through our waiver program. However, we have not updated our SOC waiver model since we first introduced it in 1994. Many conditions have changed in the state and we need to update the water quality data we use in our SOC waiver model.

As a result, many systems will be required to collect some SOC samples in 2009 or 2010. Any source that has not taken a General Pesticides (Pest1) sample since January 1, 1999, will be required to collect both a General Pesticides (Pest1) and Herbicides (Herb1) sample.

In order to minimize impacts, other SOC and volatile organic chemical (VOC) monitoring requirements have been waived based on your system's eligibility. State waivers for other sampling have also been applied to your system. There will be no organic waiver fees charged for systems that have to take these SOC samples. The samples will be assigned to your system over the 2009 -2010 period. They will be listed in your WQMR in part 2 and part 4.

Please review your WQMR closely. If you notice any mistakes on your WQMR, please call your regional office to have your records updated or corrected. Most mistakes can be resolved with a phone call, and DOH can send you a revised WQMR.

This information packet is intended to help you understand and use your 2009 WQMR. Packet materials include:

- A WQMR information sheet
- Your 2009 WQMR (yellow)

If you have any questions about your 2009 WQMR, please contact the appropriate DOH regional office staff listed below.

Eastern Regional Office	Anita Waterman	(509) 456-2475
Northwest Regional Office	Steve Hulsman	(253) 395-6777
Southwest Regional Office	Belle Fuchs/ Sophia Petro	(360) 236-3046

Sincerely,

Mike Means
Manager, Water Quality Section
Office of Drinking Water

Enclosures

Washington State Department of Health
Division of Environmental Health
Office of Drinking Water

Water Quality Monitoring Report for the Year 2009

System: COUPEVILLE, TOWN OF **PWSID:** 15550 9 **Report Date:** 03/12/2009
Contact: MALCOLM BISHOP **Group:** A - Comm **County:** ISLAND **Region:** NORTHWEST

Part 1: List of Active Sources with Water Quality Monitoring Requirements

DOH Source#	Name	Type	Use	Susceptibility Rating
S04	WELLS 4 & 7	Well Field	Permanent	Moderate
S05	FT CASEY WELLFIELD	Well Field	Permanent	High
S16	WELL 1-90 APH105	Well	Permanent	Low

Part 2: Sampling Schedule for the Year 2009

Coliform Sampling (Routine)	Jan	Feb	Mar	Apr	May	June	July	Aug	Sept	Oct	Nov	Dec
	2	2	2	2	2	2	2	2	2	2	2	2

* Indicates the requirement is an exception from WAC246-290.

- If the coliform (bacteriological) sampling schedule listed at the bottom of the current Water Facilities Inventory(WFI) form for your system is different from the schedule listed above follow the schedule on the current WFI
- Samples must be collected from representative points within the distribution system
- Repeat samples are required following an unsatisfactory sample
- A minimum of 5 routine samples are required the month following one or more unsatisfactory samples in accordance with your system's Coliform Monitoring Plan.

Lead and Copper Distribution Sampling

- Lead and copper samples must be collected from indoor faucets within the distribution system after the water has sat unused in the pipes for at least 6 hours but no more than 12 hours.
- Sample faucets should be flushed with cold water the evening prior to collecting the sample
- Part 2 indicates the month in which samples should be collected Part 4 indicates the total number of sample required

If you are required to sample Annually or once every3 years, samples must be collected between June and September

Chlorine Residual Sampling

- Systems that use continuous chlorination must take chlorine residual measurements daily(or at a reduced frequency approved by the department), and at the same time and location as routine and repeat coliform samples

Disinfection Byproducts Sampling

These requirements only relate to the Stage 1 DBP Rule. If you have not done so already, you must also meet separate Stage 2 DBP requirements. Please call the U.S. Environmental Protection Agency at (206) 553-1890 to determine your Stage 2 DBP le requirements.

- Systems that use continuous chlorination must collect a sample for total trihalomethanes(TTHM) and a sample for haloacetic acids (HAA5) for each chlorination treatment facility identified in your individual disinfection byproducts(DBP) monitoring plan. Collect the samples from the distribution system at the frequency and locations identified in your DBP monitoring plan

Washington State Department of Health
Division of Environmental Health
Office of Drinking Water

Water Quality Monitoring Report for the Year 2009

DBP monitoring	Jan	Feb	Mar	Apr	May	June	July	Aug	Sept	Oct	Nov	Dec
								*				

*Follow the procedure below to determine if your DBP monitoring is due in 2009.

Please review each successive statement below to determine your appropriate monitoring requirement. Also keep in mind that a complete DBP sample set is one TTHM and one HAA5 sample.

DBP samples must be collected during a month that has the warmest water temperature and at a location in your distribution system representing the Maximum Residence Time of the water in the pipes.

(1) If you have not taken any TTHM or HAA5 samples after 2006, you must sample in 2009. You are done with your determination and do not need to continue.

(2) If your most recent TTHM or HAA5 (DBP) compliance samples were collected during a month that didn't have the warmest water temperature or at a location that wasn't the Maximum Residence Time of the water in the pipes, another set of samples is due in 2009. You are done with your determination and do not need to continue.

3. If your most recent TTHM and HAA5 (DBP) compliance samples for each treatment plant were collected during a month that had the warmest water temperature and at a location that represented the Maximum Residence Time of the water in the pipes, please continue.

Considering your DBP Sample Results:	Years Sampled	Next Sample Set Due
3a) 2004 TTHM results averaged 20 ug/l or less and HAA5 results averaged 15 ug/l or less, and you did not monitor in 2005 or 2006, and 2007 TTHM results averaged 60 ug/l or less and HAA5 results averaged 45 ug/l or less.	2004 & 2007	2010
3b) 2005 TTHM results averaged 20 ug/l or less and HAA5 results averaged 15 ug/l or less, and you did not monitor in 2006 or 2007, and 2008 TTHM results averaged 60 ug/l or less and HAA5 results averaged 45 ug/l or less.	2005 & 2008	2011
3c) You monitored only one year and TTHM results averaged 20 ug/l or less and HAA5 results averaged 15 ug/l or less.	2007	2010
	2008	2011
If not, were they:		
4) For the last two consecutive years of sampling, TTHM results averaged 40 ug/l or less and HAA5 results averaged 30 ug/l or less in each year.	2006 - 2007	2010
	2007 - 2008	2011
If not, were they:		
5) TTHM results averaged 80 ug/l or less and HAA5 results averaged 60 ug/l or less each year, but did not meet the criteria above.	2005 - 2008	2009
If not, were they:		
6) TTHM results for any year averaged more than 80 ug/l or HAA5 results for any year averaged more than 60 ug/l and following year TTHM results averaged more than 60 ug/l or HAA5 results averaged more than 45 ug/l.	2005 - 2008	Quarterly

If you are on a quarterly monitoring schedule due to a TTHM or HAA5 exceedance, you must continue to monitor quarterly until your annual average sample results are 60 µg/L or less for TTHM and 45 µg/L or less for HAA5. Then you may return to annual monitoring.

Water Quality Monitoring Report for the Year 2009

Chemical Sampling Requirements

- Source water chemical samples must be taken from a location as near to the source as possible after any treatment.
- Nitrate and nitrite are included as part of a complete IOC.

Month	Source	Monitoring Requirement	Test Panel/Method
January		*No source chemical sampling required this month*	
February		*No source chemical sampling required this month*	
March		*No source chemical sampling required this month*	
April		*No source chemical sampling required this month*	
May		*No source chemical sampling required this month*	
June	S05	HERBICIDES	SOC - 515.2
June	S05	GENERAL PESTICIDES	SOC - 525.2
June	S16	HERBICIDES	SOC - 515.2
June	S16	GENERAL PESTICIDES	SOC - 525.2
July		*No source chemical sampling required this month*	
August		*No source chemical sampling required this month*	
ptembe		*No source chemical sampling required this month*	
October	S04	NITRATE	NITRATE
October	S05	NITRATE	NITRATE
October	S16	NITRATE	NITRATE
Novembe	S16	GROSS ALPHA	GROSS ALPHA
Novembe	S16	RADIUM 228	RAD
December	S05	GROSS ALPHA	GROSS ALPHA
December	S05	RADIUM 228	RAD

Part 3: State Waivers

- Automatically granted to all sources based on DOH assessment of conditions within the state
- No waiver application, or fee required.
- State waivers granted for the 2008 - 2010 compliance period are listed in Part 4.

Part 4: Water Quality Monitoring Frequency

- Although waivers may be granted for your system there may be some monitoring required as a condition of the waiver your system was granted.

Monitoring Group	Test Panel	Sample Location	Schedule/Status
Asbestos	ASB	Distribution	Collect 1 Asbestos sample in 2010
Bacteriological	Coli	Distribution	See routine sample schedule in part 2
Dioxin	Dioxin	All sources	State Waiver Thru Dec 2010

Washington State Department of Health

Water Quality Monitoring Report for the Year 2009

Monitoring Group	Test Panel	Sample Location	Schedule/Status
Endothall	Endo	All sources	State Waiver Thru Dec 2010
EDB and other soil fumigants	Fumigant	S04	State Waiver Thru Dec 2010
EDB and other soil fumigants	Fumigant	S05	State Waiver Thru Dec 2010
EDB and other soil fumigants	Fumigant	S16	State Waiver Thru Dec 2010
Glyphosphate	Glyphs	All sources	State Waiver Thru Dec 2010
Gross Alpha	GROSS ALPHA	S04	1 sample(s) every 3 years
Gross Alpha	GROSS ALPHA	S05	1 sample(s) every 3 years
Gross Alpha	GROSS ALPHA	S16	1 sample(s) every 3 years
Herbicides	Herbs	S04	Waived thru Dec 2010
Herbicides	Herbs	S05	1 sample between Jan 2008 - Dec 2010
Herbicides	Herbs	S16	1 sample between Jan 2008 - Dec 2010
Insecticides	Insect	S04	Waived thru Dec 2010
Insecticides	Insect	S05	Waived thru Dec 2010
Insecticides	Insect	S16	Waived thru Dec 2010
Inorganic Contaminants **	IOC	S04	1 complete IOC sample between Jan 2002 - Dec 2010
ganic Contaminants	IOC	S05	1 sample between Jan 2008 - Dec 2010
Inorganic Contaminants	IOC	S16	1 sample between Jan 2008 - Dec 2010
Lead/Copper *	LCR	Distribution	LCR 1 Set of 10 samples between Jan 2008 - Dec 2010
Nitrate *	NIT	S04	Collect 1 sample(s) every 1 year
Nitrate *	NIT	S05	Collect 1 sample(s) every 1 year
Nitrate *	NIT	S16	Collect 1 sample(s) every 1 year
General Pesticides	Pest1	S04	Waived thru Dec 2010
General Pesticides	Pest1	S05	1 sample between Jan 2008 - Dec 2010
General Pesticides	Pest1	S16	1 sample between Jan 2008 - Dec 2010
Diquat	Diquat	All sources	State Waiver Thru Dec 2010
Radium 228	RAD 228	S04	1 sample(s) every 3 years
Radium 228	RAD 228	S05	1 sample(s) every 3 years
Radium 228	RAD 228	S16	1 sample(s) every 3 years
Volatile Organic Contaminants	VOC	S04	1 sample between Jan 2008 - Dec 2010
Volatile Organic Contaminants	VOC	S05	1 sample between Jan 2008 - Dec 2010
Volatile Organic Contaminants	VOC	S16	Waived thru Dec 2010

** These contaminant monitoring groups do not have waiver options under the SDWA.*

...ur IOC waiver also requires that you sample more frequently for some analytes. You are required to collect a sample for these analytes ONLY when they are scheduled in Part 2.

Part 5: Regional Water Quality Monitoring Contact

For Further information call the Northwest Regional Office(Steve Hulsman)

Northwest Regional Office

Phone: (253) 395-6777

Washington State Department of Health

Water Quality Monitoring Report for the Year 2009

For questions regarding Disinfection ByProducts (DBP) monitoring, contact: Jolyn Leslie (253) 395-6762

Special Note

For Group A Community Systems Only: Your Consumer Confidence Report, summarizing the results of your 2008 water quality monitoring requirements is due before July 1, 2009. For further information visit www.doh.wa.gov/ehp/dw/Our_Main_Pages/consumer.htm or contact the CCR Coordinator at your Regional Office.

Information about Your 2009 Water Quality Monitoring Report (WQMR)

March 2009

The Department of Health (DOH) developed the Water Quality Monitoring Report (WQMR) to help you track your system's annual water quality monitoring requirements. Information in your WQMR is specific to your system and its individual sources. The WQMR summarizes most of the microbiological and chemical sampling requirements that apply to each source (at the source, after treatment) and to the distribution system (at the tap).

Your system may have other monitoring requirements not listed on the WQMR. Other monitoring may be required for special investigations, treatment systems, or special operation and maintenance situations. Your 2009 WQMR focuses on the Safe Drinking Water Act monitoring requirements that are linked to your source's water quality, history, compliance, and waiver status.

The 2009 WQMR has five parts:

1. List of active sources
2. Sample collection calendar for 2009
3. Information on waivers
4. Summary of sampling requirements and waivers for 2008-2010
5. Special notices and regional office staff contacts

Part 1: Sources with Water Quality Monitoring Requirements

Part 1 lists your water system's active seasonal and permanent sources. The table does not list emergency, inter-tie, purchased water sources, or individual wells that are part of an active well field. These types of sources rarely have source-specific water quality monitoring requirements.

The table lists sources by key source information taken from your recent Water Facilities Inventory (WFI). The table also shows the susceptibility rating for each source based on the susceptibility assessment on file with the department. *All active sources require a susceptibility assessment as part of the wellhead and watershed protection programs. DOH will not grant organic chemical monitoring waivers for sources that do not have a susceptibility rating.*

Part 2: Monitoring Schedule for 2009

Part 2 shows your system's sampling schedule for 2009. DOH assigns requirements to a particular month to help you stay on track and in compliance. Sampling months are assigned based in part on your past sampling dates, and also to help even out the workload for laboratories. The monthly scheduling format can help you budget your monitoring expenses. If you miss taking a sample in a particular month, collect it as soon as possible. DOH uses these collection schedules for compliance and enforcement purposes.

Coliform Monitoring: The coliform monitoring portion of this section lists the number of routine coliform samples required each month. This is the same as you would see on your WFI form. We include it on the WQMR as a convenience. Coliform samples are usually collected from household taps within the distribution system and are referred to as "distribution samples" (different from "source samples").

If the population of your system changes during the year, your coliform monitoring requirement could change. When that happens, you will receive an updated WFI with a new coliform monitoring schedule. Note: the coliform monitoring schedule on your most recent WFI provides the most accurate information.

Chemical Monitoring: This section lists "source" sampling requirements for organic and inorganic chemicals by month, source, and U.S. Environmental Protection Agency (EPA) test method. These "source" samples should be collected as close to water source as possible but *after* all treatment and before entering the distribution system.

Lead and copper samples are another type of "distribution" sampling listed in this section. These samples must be collected from indoor cold water faucets. The samples are taken within the distribution network of your water system from places where the water has sat unused in the building for at least 6 hours but no more than 12 hours. Any faucets that will be used for a lead and copper sample should be flushed with cold water the *evening before* you take the sample.

Part 3: Water Quality Monitoring Waivers

Part 3 provides general information about chemical monitoring waivers. Many systems can reduce or eliminate some monitoring requirements with a waiver. Most waivers have a fee that allows DOH to recover the costs associated with determining eligibility and managing the waiver process.

There are three categories of waivers:

1) ***Organic waivers*** reduce the monitoring requirements for volatile organic chemicals (VOCs) and synthetic organic chemicals (SOCs). Organic waivers require a susceptibility assessment rating and a waiver application.

2) ***Inorganic waivers*** reduce the monitoring requirements for inorganic chemicals (IOCs). **Many sources may still need to sample for individual IOC compounds (for example, arsenic) as a condition of their IOC waiver.** Any inorganic sampling requirements you have for 2009 will be listed in Part 2 of the WQMR. Eligibility for an IOC waiver depends on source-specific water quality history and a waiver application. **The annual sampling requirement for nitrate cannot be waived.**

3) ***Statewide waivers*** reduce or eliminate the monitoring requirements for asbestos, dioxin, soil fumigants, and other special categories of contaminants. Statewide waivers are granted by DOH without a fee and without a waiver application process. These waivers are granted based on water quality information gathered from across the state. DOH grants these automatically when applicable.

Part 4: Water Quality Monitoring Summary

Part 4 is useful for planning and budgeting for all your monitoring requirements. Part 4 provides an overview of the scope and frequency of water quality monitoring requirements for each of your sources for the 2008-2010 compliance periods. The table identifies where and how often a sample must be collected and if any waivers have been granted. Information in Part 4 relates directly to the schedule in Part 2. Sample collection frequencies are listed according to monitoring group (for example, IOC, VOC, SOC). This section identifies the specific "test panel" and sample location required.

Part 5: DOH Staff Contacts and Special Notes

Part 5 lists the name and phone number of your DOH regional office source monitoring staff. If you have questions about your 2009 WQMR or notice any inaccuracies, call your regional office to have your records updated. In most cases, errors are resolved with a phone call and a revised WQMR will be mailed to you. **Part 5 also contains *Special Notes* specific to your water system or individual sources. Please look for these Special Notes!**

IMPORTANT NOTE: We have changed the way we are granting Organic waivers for the 2008-2010 monitoring period. The biggest impact will be on SOC sampling. We are glad to have saved water systems money with previous waivers and still protected public health. However, we have not updated our SOC waiver model since we first introduced it in 1994. Many conditions have changed in the state and we need to update the water quality data we use in our SOC waiver model.

Therefore, many systems will be required to collect some SOC samples in 2009 or 2010. Any source that has not taken a General Pesticides (Pest1) sample since January 1, 1999, will be required to collect both a General Pesticides (Pest1) and Herbicides (Herb1) sample. Other SOC and VOC monitoring requirements have been waived based on your system's eligibility. State waivers for other sampling have also been applied to your system. There will be no organic waiver fees charged for systems that have to take these SOC samples. The samples will be assigned to your system over the 2009 -2010 period. They will be listed in your WQMR in part 2 and in part 4. ***Please pay close attention to your SOC monitoring requirements.***

WATER QUALITY MONITORING PLAN
Part I

The plan is divided into two parts. Part I is general information applicable to all water systems. Part II includes the information applicable to the Purveyor's system, including the most recent WA DOH monitoring schedule issued to the system. Waiver options are available for some parameters, see Part II.

COLIFORM MONITORING

A. SUMMARY OF SYSTEM INFORMATION

Details on the major system components area provided in Part II.

B. SAMPLING INFORMATION

Sampling Requirements:

The minimum number of routine samples required each month is a function of the number of people supplied by the system. If a sample shows the presence of coliform, the number of repeat samples required to be collected in the month the presence was detected and in the following month is also a function of the number of people supplied by the system. Both requirements for small systems are summarized below.

Population	No. of Routine Samples Each Month	No. of Repeat Samples in the Same Month	No. of Samples In the Next Month
25 to 1,000	1	4	5
1,001 to 2,500	2	3	5

In the month the presence of coliform was detected, the four repeat samples shall be collected from the following locations:

First Repeat: from the sample location of the previous "routine" sample.

Second Repeat: from a customer within 5 service connections either side of the "routine" sample location (e.g., upstream).

Third Repeat: from a customer within 5 service connections on the opposite side of the "routine" sample location as the second repeat sample location (e.g., downstream).

Fourth Repeat: from the source or right after storage that will provide useful information for determining a source of contamination.

For a system collecting two routine samples per month, the Fourth repeat sample may be omitted.

For a system collecting two routine samples per month, the Fourth repeat sample may be omitted.

The month following the reported presence of coliform, five samples must be collected from the distribution system. The sample locations should include the "routine" sites scheduled for the current and previous month. The remaining sample sites should be chosen to represent an overall sampling of water quality in the distribution system.

Additional Sampling:

The above sampling schedule states the minimum requirements. The Purveyor may choose to collected additional samples.

When the presence of coliform occurs more than one time in a six-month period, additional samples should be collected from the sources of supply, other areas of distribution system, and from the storage reservoirs to determine extent of the coliform problem. Additional sampling will likely be required by the WA DOH if the repeat sampling shows the presence of coliform.

For the procedures to be followed if repeat samples show the presence of coliform, consult the Purveyor's "Emergency Procedures" in this Water System Plan.

Identified Sample Locations:

The routine sample sites should be selected based on:

a) Alternating the sites within the service area.

b) To detect bacteria regrowth or system contamination, selecting sites near the end of the distribution system and/or that will be representative of a long retention time of water in the system.

It is the Purveyor's responsibility to select and maintain representative sample sites.

The locations of the routine and repeat samples are listed in Part II.

Routine sample sites should utilize "Kupferle No. 88" curb-side water sample stations installed on the water mains.

For repeat sample sites or routine sites wher curb side stations are not installed, samples will be collected in accordance with WA DOH publication *Preparation of a Coliform Monitoring Plan For Group A Public Water Systems*, February 2003. The household tap should be in as clean an environment as possible.

When selecting sample taps avoid the following:

- Swivel faucets
- Hot/cold "mixing faucets" (i.e., faucets with a single lever)
- Drinking fountains
- Janitorial sinks
- Frost-free hose bibs
- Leaking or spraying faucets
- Faucets below ground or near ground level
- Faucets served by home filters or other home treatment systems.

Repeat samples will be collected from the customer tap as previously described.

At the time of sample collection a free chlorine residual measurement must be noted on the lab slip.

DISINFECTANTS AND DISINFECTION BYPRODUCTS

A. REQUIREMENT FOR PROGRAM

The federal **Stage 1** Disinfectants and Disinfection Byproducts Rule (DBPR) requirements were incorporated into Department of Health drinking water regulations on April 27, 2003 and became effective for most systems on January 1, 2004. The Stage 1 DBPR specifically applies to systems that continuously use chlorine or ozone for groundwater not under the influence of surface water, either as a disinfectant or an oxidant (e.g. for water treatment). The purpose of the monitoring is to detect harmful disinfection or oxidation byproducts (e.g., chemicals if consumed over a long period of time may be carcinogenic). These chemicals may be formed in water containing natural substances that will react with chlorine or ozone.

There are no waivers allowed for this rule. A reduced monitoring schedule may be approved if the first or subsequent year sample results meet the criteria.

The federal **Stage 2** Disinfectants and Disinfection Byproducts Rule (DBPR) was published in January 2006. The Stage 2 DDPR set new monitoring requirements. They apply to community and non-transient non-community system that use chlorine, chloramines, chlorine dioxide or ozone.

B. MONITORING REQUIREMENTS

STAGE 1 DBPR

General

- All monitoring must be done during normal operating conditions. Certified operators or persons trained by the system-certified operator must do the residual chlorine monitoring and a certified laboratory must do the disinfection byproduct analysis.

Disinfectant Monitoring

- Field residual measurement of chlorine (free and total) may be done with a DPD test kit.

- Residual chlorine measurements shall be taken at the same time and place as routine or repeat coliform samples. Systems have the options of including or excluding daily monitoring of chlorine residuals at the point of disinfection. Residual measurements are recorded on the coliform sample form.

  Note: Residual measurements of ozone residual cannot be made due to the rapid decomposition rate of ozone to oxygen.

- The residual disinfectant is calculated at the end of each calendar quarter based on the previous 12 consecutive months of data.

Disinfection Byproducts

- For each chlorination or oxidation source, collect each year one sample for Total Trihalomethanes (TTHM) and one for Haloacetic Acids (HAA5).

- Samples must be taken at the location in the distribution system representing the estimated maximum residence time to each source of disinfectant or oxidant. Samples should be collected in July, August or September.

- Samples are collected using special sample kits supplied by the laboratory. Directions are provided with the kits for the sampling procedures. The following samples shall be collected at each site:

    - For Total Trihalomethanes, collect two 40-ml samples.
    - For Haloacetic Acids, one 50-ml or one 250-ml sample.

> **Note:** The following brochures are available from the WA DOH for guidance on sampling: *Haloacetic Acid (HAA5) Sampling Procedure*, Publication #331-223; *Total Trihalomethance (TTHM) Sampling Procedure*, Publication # 331-226

STAGE 2 DBPR

The major components to the Stage 2 DBPR for systems less than 10,000 populations are:

- The Initial Distribution System Evaluation (IDSE), which was due April 1, 2008; and
- By March 2010 prepare a monitoring plan for compliance monitoring. The plan must be submitted by July 1, 2010.
- Begin compliance monitoring by October 1, 2013.

> **Note:** The following brochure is available from the WA DOH for guidance on sampling: *Transition from Stage 1 to Stage 2 Disinfection Byproducts Rule Monitoring.*

C. SELECTED SAMPLE COLLECTION SITES

The location(s) of the sample site(s) are listed in Part II.

D. COMPLIANCE

The maximum residual disinfectant level for chlorine is 4.0 mg/L. The source chlorination level is less than 0.5 mg/L, significantly less than the maximum residual disinfectant level.

The maximum contaminant level for Total Trihalomethanes is 0.080 mg/L.

The maximum contaminant level for Haloacetic Acids is 0.060 mg/L.

D. MONITORING RESULTS

A copy of the most recent results are attached to Part II.

LEAD AND COPPER

A. REQUIREMENT FOR PROGRAM

The US EPA requirement to sample lead and copper levels in drinking water is intended to determine the need for water treatment to provide corrosion control. Most of the lead and copper that occurs in the drinking water is the result of corrosive water. The "action levels" to trigger the need for treatment are 0.015 mg/L and 1.3 mg/L for lead and copper, respectively. These criteria are conservative. For example, the State's maximum contamination level for lead is 0.050 mg/L.

Information on the number of customers served by a system is provided in Part II.

Sampling locations:

- Single family structures containing copper pipes with lead solder installed before 1986 (date of lead solder ban in Washington), and before 1983 if possible
- Customers with water softeners should not be selected (softened water is corrosive)

Sampling protocol:

- Use one-liter sample bottles (supplied by lab)
- Sample should be obtained from a cold water kitchen or bathroom tap; first draw of water after water stands at least 6-hours in plumbing system; the customer may collect the sample

The complete sample procedure and discussion of the regulatory requirements may be found in the US EPA publication "Lead and Copper Monitoring Guidance for Water Systems Serving 101 to 500 (or <100; 510 to 3,300) Persons".

B. SAMPLING FREQUENCY AND LIST OF SAMPLE SITES

The utility is required to collect samples as described below:

POPULATION	< 100	101 TO 500	500 TO 3,300
INITIAL AND 6 MONTHS	5	10	20
ANNUALLY FOR THREE YEARS	5	10	10
EVERY THIRD YEAR THEREAFTER	5	10	10
90th PERCENTILE FOR INITIAL SAMPLES	Average of 2 highest	Second highest	Third highest

The above table assumes that in each sampling period, an action level is not exceeded. Because repeat samples are required, more sites than the number above meeting the location selection criterion should be identified.

Attached is the list of addresses used for the collection of samples and the latest test results.

The age of buildings and the age and type of plumbing therein were determined by the Purveyor based on discussion with the property owners, review of County files, and/or Purveyor's files.

C. COMPLIANCE WITH STANDARDS

The "action levels" to trigger the need for corrosion treatment is 0.015 mg/L and 1.3 mg/L for lead and copper, respectively. If the 90th percentile level of lead or copper exceed 0.015 or 1.3 mg/L, the "action level" is considered exceeded.

D. SELECTED SAMPLE COLLECTION SITES

The locations of the sample sites are listed in Part II.

E. MONITORING RESULTS

A copy of the most recent results are attached to Part II.

ASBESTOS MONITORING

A. REQUIREMENT

Systems with asbestos cement pipe in quantities greater than 10 percent of their water system inventory shall collect one water sample from the distribution system for analysis of asbestos fiber content.

An assessment of vulnerability needs to be determined for a system if the maximum contaminant level (MCL) of asbestos in the water exceeds seven million fibers per liter greater than ten microns in length (MFL > μm).

B. SAMPLE INVENTORY AND SAMPLE LOCATION

The distribution system contains greater than 10 percent asbestos cement pipe. **The locations of the sample sites are listed in Part II.**

C. SAMPLE PROTOCOL

Two one-liter glass sample bottles provided by the laboratory shall be used to collect the sample.

The laboratory recommended to provide the analytical service is:

AVOCET Environmental Testing (360) 734-9033
1500 North State Street, Suite 200
Bellingham, WA 98225

The sample holding time is only 48 hours hence the sample should be collected the day before a day scheduled by the lab for routine pickup of samples.

D. SAMPLE RESULTS

A copy of the most recent results are attached to Part II.

NITRATE MONITORING

A. REQUIREMENT

Samples are required once per year.

B. SAMPLE RESULTS

A copy of the most recent results are attached to Part II.

WATER QUALITY MONITORING PLAN
Part II

COLIFORM MONITORING

Sources:

The Town presently obtains water from two groundwater fields denoted as the In-Town well field and the Fort Casey well field.

The In-Town well field, comprising of Well Nos. 1, 4, and 7, withdraws water from USGS designated Aquifer 'C'. In-Town Well No. 6 withdraws water from USGS designated Aquifer 'A'. Well Nos. 4 and 7 are used as lag sources for high water demand periods. The other equipped sources are on standby for emergency use.

In-Town operating Well Nos. 1, 4 and 7 discharge into a common transmission main to the In-Town water treatment plant. Well No. 6 pumps into the distribution system.

The Fort Casey well field is located at Wanamaker Road and Keystone Road, approximately 5 miles southeast of the Town.

The Fort Casey well field was originally developed in the early 1900's by the U.S. Army to supply Fort Casey. The Town purchased the well field and transmission main thereto in 1950's. In 1975, utilizing a Washington Department of Health grant, an additional 25 acres was purchased immediately to the north. The grant was for the purchase of land to provide a protected watershed. The well field now occupies a 55-acre tract of land. Currently four wells operate in the low elevation portion of the well field and two in the high elevation portion of the well field.

Storage:

The Town's primary storage is located at two 500,000 gallon reservoirs on Pennington Hill. The reservoirs (designated the Sunset Terrace reservoirs) are of steel standpipe design, 65 feet in height, 37.5 feet in diameter. The reservoirs are located at the point of highest ground elevation within the Town.

Water storage is also provide at the In-Town water treatment plant (25,000 gallons) and the Fort Casey water treatment plant (105,000 gallons product and 23,000 gallons or raw water).

Treatment:

The Town has two water treatment plants, designated as the In-Town Water Treatment Plant and the Fort Casey Water Treatment Plant. The old equipment in In-Town plant was removed and was scheduled for replaced by an oxidation and pressure filtration system to remove iron, manganese and hydrogen sulfide. With a shift to out-of-Town sources of supply, the replacement of the treatment equipment has been placed on hold.

The Fort Casey Water Treatment Plant has been in operation since 1998. The treatment process consists of an oxidation and pressure filtration system to remove iron, manganese and hydrogen sulfide.

Chlorination is provided at each treatment plant and at Well No. 6 (when in operation as emergency supply). Chlorination is provided as a precautionary measure. The Town does not have a history of positive coliform bacteria samples.

Pumping Stations:

None.

Pressure Zones:

Pressure reduction is provided for the Fort Casey State Park, SPU Campus and downstream customers because of the concern of failure in the old cast iron pipe (c 1900) within the State Park and SPU Campus and leaks in the Town's steel mains.

Population:

The water system currently supplies approximately 780 single-family residential customers within its service area. At 2.4 residents per customer, the current service population is 1,870. The Town also supplies multi-family, commercial, governmental and institutional customers. The estimated number of people presently supplied by the system is approximately 2,400.

Sample Locations

The following is a summary of the current monitoring plan.

May, September and January

Location	1st Sample	2nd Sample
Routine	2136 Madrona (Sink)	600 Ninth (WWTP) (Sink)
Repeat 1 – downstream	2126 Madrona	804 Ninth
Repeat 2 - upstream	2177 Madrona	504 Ninth
Repeat 3	Both Sunset Reservoir & Ft. Casey WTP	Both Sunset Reservoir & Ft. Casey WTP

June, October and February

Location	1st Sample	2nd Sample
Routine	901 Alexander (HB)	305 Crown (HB)
Repeat 1 – downstream	23 Front	315 Crown
Repeat 2 - upstream	103 Coveland	318 Crown
Repeat 3	Both Sunset Reservoir & Ft. Casey WTP	Both Sunset Reservoir & Ft. Casey WTP

July, November and March

Location	1st Sample	2nd Sample
Routine	308 Ft. Casey (Sample Sta)	Town Hall (Sink)
Repeat 1 – downstream	267 Ft. Casey	703 Center
Repeat 2 - upstream	229 Fort Casey	701 N. Main
Repeat 3	Both Sunset Reservoir & Ft. Casey WTP	Both Sunset Reservoir & Ft. Casey WTP

August, December and April

Location	1st Sample	2nd Sample
Routine	1045 Summit Lp (HB)	140 Ebey (HB)
Repeat 1 – downstream	1039 Summit Loop	82 Ebey RD
Repeat 2 - upstream	1051 Summit Loop	154 Eby Rd
Repeat 3	Both Sunset Reservoir & Ft. Casey WTP	Both Sunset Reservoir & Ft. Casey WTP

The locations of the routine sites are shown on the attached drawing.

The current plan includes the collection of two bacteriological samples each month.

The Town has begun installation of Curbside water quality monitoring stations for collection routine bacteriological samples.

Response to Positive Coliform Results

In accordance with the Emergency Plan, the Town's **Public Works Director** shall be responsible for notification of the County Health Depart and the WA Department of Health.

The Emergency Plan also sets forth the procedures for notifying customers of "Non-acute" and "Acute" health advisories (forms attached).

The system operator shall follow the procedures set forth in WAC 246-290-320.

DISINFECTION & DISINFECTION BYPRODUCTS

Sample Location

Attached are the following:

- Drawing showing the Stage 2 DBPR sample.
- 40/30 Certification Letter with reply from the US EPA
- Sample results submitted with the 40/30 form.

The most recent results are attached.

LEAD AND COPPER MONITORING

Sample Locations

The following are the locations for collection samples for lead and copper analysis

The most recent results are attached.

ASBESTOS MONITORING

The distribution system contains greater than 10 percent asbestos cement pipe.

The most recent result for asbestos monitoring is attached.

Washington State Department of Health
Division of Environmental Health
Office of Drinking Water

PUBLIC NOTICE CERTIFICATION
Acute Coliform MCL

Within 10 days of notifying your customers, you must send a copy of each type of notice you distribute (hand-delivered notices, press releases, newspaper articles, etc.) to your Regional Office of Drinking Water. Also complete and send this form, which certifies that you have met all the public notification requirements. If the boil water advisory remains in effect more than three months, you must notify your water users again and provide another Public Notice Certification to the Department of Health. *With this certification, you are also stating that you will meet future requirements for notifying new billing units of the violation or situation.*

Water System:_____ ID #_____ County:_____

Violation Date:_____ / _____ / _____ Violation Type:_____

This public water system certifies that public notice has been given to water users, following state and federal requirements for delivery, content, and deadlines.

Complete the following items:

Yes No

☐ ☐ Distribution was completed on ___ / ___ /____. Check all that apply:
- ☐ Hand delivery,
- ☐ Press release (TV, radio, newspaper, etc.),
- ☐ Posting at_____ (by DOH approval only),
- ☐ Other _____ (by DOH approval only).

☐ ☐ Were the water users notified within 24 hours?

_____ _____ _____
Signature of owner or operator | Position | Date

The Department of Health is an equal opportunity agency. For persons with disabilities, this form is available on request in other formats. To submit a request, please call 1-800-525-0127 (TTY 1-800-833-6388).

Northwest Regional Office:
20435 72nd Ave. S.
Suite 200
Kent WA 98032
(253) 395-6775
Fax: (253) 395-6760

Southwest Regional Office:
243 Israel Road SE
Town Center 3
Tumwater, WA 98501
(360) 236-3030
Fax (360) 664-8058

Eastern Regional Office:
1500 West Fourth Ave.
Suite 305
Spokane WA 99204
(509) 456-2788
Fax: (509) 456-2997

DOH Form #331-264 (Updated 6/26/06)

WARNING:

Do not drink tap water without boiling it first!

☐ **Fecal coliform**
☐ **E. coli bacteria**
☐ **Other:** _____

were detected in the water supply on:
(date) _____.

Boiling kills bacteria and other organisms in the water:

- **Bring water to a rolling boil for one minute**
- **Let water cool before using**

To avoid possible illness: use boiled or purchased bottled water for drinking, making ice, brushing teeth, washing dishes, and food preparation until further notice.

Contact your doctor, if you experience one or more of these symptoms: nausea, cramps, diarrhea, jaundice, headache, and/or fatigue. People with chronic illnesses, infants and the elderly may be at higher risk and should seek medical advice.

Water System: _____

I.D.: _____

County: _____

Contact: _____

Telephone: _____

Date notice distributed: _____

See reverse side for more information

WARNING:

Do not drink tap water without boiling it first!

☐ **Fecal coliform**
☐ **E. coli bacteria**
☐ **Other:** _____

were detected in the water supply on:
(date) _____.

Boiling kills bacteria and other organisms in the water:

- **Bring water to a rolling boil for one minute**
- **Let water cool before using**

To avoid possible illness: use boiled or purchased bottled water for drinking, making ice, brushing teeth, washing dishes, and food preparation until further notice.

Contact your doctor, if you experience one or more of these symptoms: nausea, cramps, diarrhea, jaundice, headache, and/or fatigue. People with chronic illnesses, infants and the elderly may be at higher risk and should seek medical advice.

Water System: _____

I.D.: _____

County: _____

Contact: _____

Telephone: _____

Date notice distributed: _____

See reverse side for more information

What is fecal coliform and E. coli?

Fecal coliform and E. coli are bacteria whose presence indicates that the water may be contaminated with human or animal wastes. Microbes in these waters can cause short-term effects, such as diarrhea, cramps, nausea, headaches, or other symptoms. They may pose a special health risk for infants, young children, some of the elderly, and people with severely comprised immune systems.

How long will this warning be in effect?

We will consult with the Washington State Department of Health about this incident. We will notify you when you no longer need to boil the water.

What is fecal coliform and E. coli?

Fecal coliform and E. coli are bacteria whose presence indicates that the water may be contaminated with human or animal wastes. Microbes in these waters can cause short-term effects, such as diarrhea, cramps, nausea, headaches, or other symptoms. They may pose a special health risk for infants, young children, some of the elderly, and people with severely comprised immune systems.

How long will this warning be in effect?

We will consult with the Washington State Department of Health about this incident. We will notify you when you no longer need to boil the water.

October 2008

40/30 Certification Letter

Complete and return this form, a map showing entry point(s) and TTHM and HAA5 monitoring locations, and the TTHM and HAA5 data you are basing this certification on (sample results must be from 2005 and beyond) to:

Wendy Marshall
U.S. Environmental Protection Agency
1200 Sixth Avenue, Suite 900, OWW-136
Seattle, WA 98101

Public Water Supply (PWS) Information

PWS Name: TOWN OF COUPEVILLE PWS ID: 155509

Mailing Address: P.O. Box 725

City: COUPEVILLE State: WA

Zip: 98239

Population Served: 2510

System Type: ☑ Ground Water
☐ Surface Water ☐ Ground Water Under the Influence of Surface Water

Contact Person

Name: MALCOLM BISHOP Title: PUBLIC WORKS DIR.

Phone Number: (360) 678-4461

Email Address (if available): mbishop@whidbey.net

Certification

I herby certify that each individual Stage 1 DBPR compliance sample collected during the period of JANUARY 2007 *to* DECEMBER 2008 *was less than or equal to 0.040 mg/L for TTHM and 0.030 mg/L for HAA5. I understand that to be eligible, each individual sample must be equal to or below these values. I also certify that this PWS collected all required Stage 1 samples as required by the State and did not have any Stage 1 monitoring violations during this time period. I am including the TTHM and HAA5 data that I am basing this certification on and a distribution system schematic with my system's DBP compliance monitoring sites plotted for review by the U.S. Environmental Protection Agency.*

Signature: Malcolm Bishop

Date: 8-20-08

Contact for questions regarding this form:
Wendy Marshall, U.S. EPA, Region 10, 206-553-1890, marshall.wendy@epa.gov

EXACT SCIENTIFIC SERVICES

3929 Spur Ridge Lane Suite 101
Bellingham, WA 98226
360.733.1205 phone
888.818.2978 fax
lab@exactscientific.com

Client:	Avocet Environmental	Ref Number:	07-02220
Attn:	56652	Phone:	(360) 734-9033
	1500 N. State Ste Ste. 200	Fax	(360) 734-0467
	Bellingham, WA 98225	Email:	

Date Collected:	**8/22/2007**	System Group Type:	A
System Number:	**155509**	System Name	Town of Coupeville
Lab Sample Number:	**174 08652**	County	Island
Sample Location:	**2185 Madrona 1-4**	Source Number:	**S02**
Sample Purpose:	**RC- Routine Compliance**	Date Received:	**8/29/2007**
Sample Composition:	**Blended Source**		
		Date Reported:	**9/5/2007**
Sample Collected by:	Jack Robinson	Sample Type:	**Post Treatment**

Volatile Organic Chemicals (VOC) Analysis Report
EPA Test Method - EPA 524.2

HaloAcetic Acids (HAA's)

Batch # HAA_070828 **Date Run** 8/30/07 **Method** **EPA 552.3**

DOH #	Analytes	Results	Units	RL	MCL	Comment	Analyst
411	Monochloroacetic Acid	ND	ug/L	1			TW
414	Monobromoacetic Acid	ND	ug/L	1			TW
412	Dichloroacetic Acid	ND	ug/L	1			TW
413	Trichloroacetic Acid	ND	ug/L	1			TW
415	Dibromoacetic Acid	ND	ug/L	1			TW
416	HAA(5)	ND	ug/L	1	60		TW
417	Bromochloroacetic Acid	ND	ug/L	1			TW

Total Trihalo Methane (TTHM's)

Batch # THM_070831 **Date Run** 8/31/07 **Method** **EPA 524.2**

DOH #	Analytes	Results	Units	RL	MCL	Comment	Analyst
27	Chloroform	1.5	ug/L	0.5			TW
28	Bromodichloromethane	0.6	ug/L	0.5			TW
29	Chlorodibromomethane	5.3	ug/L	0.5			TW
30	Bromoform	26.4	ug/L	0.5			TW
31	Total Trihalomethane	33.8	ug/L	0.5	80		TW

ND =	Not dected with the sensitivity of the instrument
RL	Minimum reporting level
MCL	EPA maximum contaminant Level
Trigger	Washington DOH response level IF results exceed this level, contact the DOH

Lab Supervisor: TW Date: 9/13/07

EXACT SCIENTIFIC SERVICES

3929 Spur Ridge Lane Suite 101
Bellingham, WA 98226
360.733.1205 phone
888.818.2978 fax
lab@exactscientific.com

Client:	Avocet Environmental	Ref Number:	07-02220
Attn:	56653	Phone:	(360) 734-9033
	1500 N. State Ste Ste. 200	Fax	(360) 734-0467
	Bellingham, WA 98225	Email:	

Date Collected:	**8/22/2007**	System Group Type:	A
System Number:	**155509**	System Name	Town of Coupeville
Lab Sample Number:	**174 08653**	County	Island
Sample Location:	**95 Bainbridge 5-8**	Source Number:	**S02**
Sample Purpose:	**RC- Routine Compliance**	Date Received:	**8/29/2007**
Sample Composition:	**Blended Source**		
		Date Reported:	**9/5/2007**
Sample Collected by:	Jack Robinson	Sample Type:	**Post Treatment**

Volatile Organic Chemicals (VOC) Analysis Report
EPA Test Method - EPA 524.2

HaloAcetic Acids (HAA's)

Batch # HAA_070828 **Date Run** 8/30/07 **Method EPA 552.3**

DOH #	Analytes	Results	Units	RL	MCL	Comment	Analyst
411	Monochloroacetic Acid	ND	ug/L	1			TW
414	Monobromoacetic Acid	ND	ug/L	1			TW
412	Dichloroacetic Acid	ND	ug/L	1			TW
413	Trichloroacetic Acid	ND	ug/L	1			TW
415	Dibromoacetic Acid	ND	ug/L	1			TW
416	HAA(5)	ND	ug/L	1	60		TW
417	Bromochloroacetic Acid	ND	ug/L	1			TW

Total Trihalo Methane (TTHM's)

Batch # THM_070831 **Date Run** 8/31/07 **Method EPA 524.2**

DOH #	Analytes	Results	Units	RL	MCL	Comment	Analyst
27	Chloroform	0.8	ug/L	0.5			TW
28	Bromodichloromethane	2.2	ug/L	0.5			TW
29	Chlorodibromomethane	5.5	ug/L	0.5			TW
30	Bromoform	12.9	ug/L	0.5			TW
31	Total Trihalomethane	21.4	ug/L	0.5	80		TW

ND =	Not dected with the sensitivity of the instrument
RL	Minimum reporting level
MCL	EPA maximum contaminant Level
Trigger	Washington DOH response level IF results exceed this level, contact the DOH

Lab Supervisor: TW Date: 9/13/07

Avocet Environmental Testing
1500 North State Street, Suite 200
Bellingham, WA 98225
(360) 734-9033

AVOCET ENVIRONMENTAL TESTING

DRINKING WATER REPORT FOR LEAD AND COPPER

Date Collected:	See Below	System Group Type:	(A) B Private
Water System ID #:	155509	System Name:	Town of Coupeville
Lab/Sample #:	See Below	County:	Island
Sample Location:	See Below	Source Number(s):	S93
		Date Received:	04/25/07
Sample Purpose:	RC- Routine Compliance	Date Analyzed:	05/08/07
Sample Composition	Distribution	Date Reported:	05/15/07
Supervisor:	Phil Skovron	Sample Type:	Post-Treatment
		Sample Collected by	Jack Robinson
		Phone Number:	(360) 678-6695
Send Report To:	Town of Coupeville P.O. Box 725 Coupeville, WA 98239	Bill To:	Same

	LEAD	COPPER
DOH #	9	23
SRL	0.002 mg/L	0.02 mg/L
TRIGGER	0.015 mg/L	1.3 mg/L
MCL	0.015 mg/L	1.3 mg/L
METHOD	3113B	3111B
ANALYST	ML	ML

Lab Sample #	Date Collected	Site / Location	RESULTS Lead mg/L	RESULTS Copper mg/L
05752249	04/24/07	#2 281 S. Ft. Casey Rd.	<0.001	0.12
05752250	04/24/07	#4 655 S. Engle Rd.	<0.001	0.83
05752251	04/24/07	#5 1276 S. Engle Rd.	<0.001	0.66
05752252	04/24/07	#6 15 SW Bainbridge Ln.	<0.001	0.71
05752253	04/24/07	#7 47 SW Bainbridge Ln.	<0.001	0.82
05752254	04/24/07	#8 63 SW Bainbridge Ln.	0.003	0.56
05752255	04/24/07	#9 502 NW Oakmont St.	0.001	0.54
05752256	04/23/07	#10 806 NE Lindsay St.	<0.001	0.10
05752257	04/24/07	#11 1034 Pennington	<0.001	0.23
05752258	04/24/07	#13 411 Faris St	0.001	0.26

NOTES:

Trigger: 0.015 mg/L for Lead and 1.3 mg/L for Copper. If compounds detected at concentration are in excess of this level, contact your regional DOH office for further information.

SRL (State Reporting Levels): Indicates the minimum reporting level required by the Washington DOH

MCL (Maximum Contaminant Level): If the contaminate amount exceeds the MCL, immediately contact your regional DOH office.

< = This symbol before a number means the compound was not detected in the sample; also, the laboratory used a Method Detection Level (lab MDL) lower than the SRL.

COMMENTS: Copy sent to Washington State DOH

Coupeville Water Quality Report

Volume 11, Issue 1, July 2009 | Town of Coupeville ID# 155509 | Phone 360-678-4461

Annual Report for 2008

We're pleased to present the Annual Water Quality Report for 2008. This report is designed to educate and inform you about the water quality and services we deliver to you every day. This publication conforms to the federal regulation requiring water utilities to provide water quality information annually. We believe this information provides a valuable service to our customers and confirms our commitment to provide quality water for all residents.

This report contains technical information to help you understand what is in your water and what isn't.

Your drinking water is highly regulated by Washington State Department of Health (DOH) and US Environmental Protection Agency (EPA) and is tested regularly. Because our constant goal is to provide you with a safe source of drinking water, we hope you will find this consumer report interesting and informative.

Source of Water

The sources of drinking water (both tap water and bottled water) include rivers, lakes, streams, ponds, reservoirs, springs, and aquifers.

The water for Coupeville comes from aquifers, which supply two wells in town and six wells out of town within the Fort Casey well field located 4.1 miles south east of town. For the year 2008, 62% of the Town's water came from the Fort Casey well field.

Well water is treated at the Ft. Casey Water Treatment Plant for removal of iron (Fe) and manganese (Mn), components often found in Whidbey Island source waters. The treatment plant uses a combination of air injection and filters to remove these minerals. The water is also aerated at the plant to rid the system of hydrogen sulfide, the source of the rotten egg odor. The water is then chlorinated before it goes to the Town's Sunset Terrace Reservoirs. Water coming from the in-town wells is chlorinated at the In-town Water Treatment Plant prior to going to Sunset Terrace Reservoirs.

The entire treatment process is regularly monitored through daily routine testing at both water treatment plants. Other tests are conducted at contracted laboratories.

All drinking water, including bottled water, contains minute amounts of some contaminants. Their presence does not necessarily indicate that the water poses a health risk.

Potential contaminants and their sources include:

- *Microbial contaminants, such as viruses/bacteria, which may come from sewage treatment plants, septic systems, agricultural livestock operations, and wildlife.*
- *Inorganic contaminants, such as salts and metals, which are naturally occurring or result from urban stormwater runoff, industrial or domestic wastewater discharges, mining, or farming.*
- *Organic contaminants, which are by-products of industrial processes and petroleum production, stormwater runoff, and septic systems.*
- *Radioactive contaminants, which can be naturally occurring.*

More information about contaminants and potential health effects can be obtained by calling the Environmental Protection Agency's (EPA) Safe Drinking Water Hotline: **1-800-426-4791.**

Keeping pace with up-graded water testing and more stringent federal standards is a challenge, but one that the Town of Coupeville strongly supports. Because we are committed to keeping you informed about water issues, we encourage you to read this report. Each year we will update this report in response to changing federal requirements, so you may want to save it. If you have questions or comments on this report or suggestions for future reports, please call the Public Works Director, at Town Hall, **(360) 678-4461, Ext 4.**

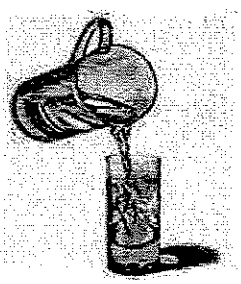

Clean water is everyone's business

2008 Water Quality Monitoring Results

The tables below note each compound, units of measure and allowable levels, and show the levels found in Coupeville's source water. Typical sources for these compounds are noted. Presence of certain compounds does not necessarily pose a health risk.

Some tests are required annually and others are required periodically. Data shown is the most recent available. Abbreviations and definitions are listed on page 5 of this report to help you become more familiar with the terms used. The column titled "Met drinking water standards?" shows that your water meets all requirements.

The Town tests for more components than are shown in this report. Components that were below detection levels are not listed below; only test results that yielded positive results are shown. (Except for bacteria results which are always shown)

Do you want to learn more? Contact the Public Works Director, Town Hall, 4 NE 7th Street, Tel: (360) 678-4461, ext. 4.

The Coupeville Town Council meets monthly, the second and fourth Tuesdays of the month, at 6:30 p.m. in the Commissioner's Hearing Room of the County's Annex Building at 1 NE Sixth Street. Agendas are posted at the Post Office, Courthouse and Town Hall.

WATER DISTRIBUTION SYSTEM – Bacteria and Disinfection Byproduct Test Results

Component	Test Date	Results	Units	MCLG	MCL	Met drinking water standards?	Typical Sources
Total Coliform Bacteria	Monthly	ND	NA	0	• 0	Yes	Coliforms are bacteria that are naturally present in the environment and are an indicator that other potentially harmful bacteria may be present.
Total Fecal Coliform Bacteria	Monthly	ND	NA	0	♦ 0	Yes	Human and animal fecal waste are potential sources for these bacteria.
Total Trihalomethanes	8/22/07	33.8	ppb	NA	80	Yes	Byproducts of drinking water chlorination.

RESIDENTIAL WATER SOURCES – Lead and Copper Test Results

Component	Test Date	Results	Units	MCLG	MCL	Met drinking water standards?	Typical Sources
Lead (1) *	4/24/07	High = 0.003, Range= <0.001-0.003	ppm	0	.015	Yes, 90th percentile reading is compliant.	Corrosion of household plumbing systems, erosion of natural deposits.
Copper (1) *	4/24/07	High= 0.83, Range= 0.012-0.83	ppm	1.3	1.3	Yes, 90th percentile reading is compliant.	Corrosion of copper plumbing; erosion of natural deposits; leaching from wood preservatives. See additional information on lead and copper in your drinking water at the end of this report.

** See "Lead & Copper and Your Drinking Water" on page 5. (1) Ten (10) representative samples taken through the system.*

"IN TOWN" SOURCE WELLS – Test Results

Inorganic Compounds or IOC							
Component	Test Date	Results	Units	MCL G	MCL	Met drinking water standards?	Typical Sources
Arsenic	6/25/08	9	ppb	NA	10	Yes	Erosion of natural deposits; runoff from orchards; runoff from glass and electronics production wastes.
Barium	9/26/07	0.13	ppm	2	2	Yes	Discharge of drilling wastes; discharge from metal refineries; erosion of natural deposits.
Fluoride	4/25/07	0.6	ppm	4	4	Yes	Erosion of natural deposits; water additive which promotes strong teeth; discharge from fertilizer & aluminum factories.
Nitrate - N	9/24/08	<0.5	ppm	10	10	Yes	Runoff from fertilizer use; leaching from septic tanks; sewage; erosion of natural deposits.
Total Dissolved Solids (TDS) (1)	4/30/08	580	ppm	NA	500	No (4)	Geologic; erosion of natural deposits.
Conductivity (2)	9/26/07	890	Uho/cm	NA	700	No (4)	Erosion of natural deposits, or seawater.
Iron (3)	9/26/07	0.015	ppm	ND	0.3	Yes	Erosion of natural deposits.
Manganese (3)	9/26/07	0.11	ppm	ND	0.05	No	Erosion of natural deposits.
Chloride	12/1/08	84	ppm	NA	250	Yes	Erosion of natural deposits, or seawater.
Sulfate	9/26/07	28	ppm	NA	250	Yes	Erosion of natural deposits.
Sodium	9/26/07	51	ppm	NA	NA	NA	Erosion of natural deposits, or seawater.
Other Testing (not required or regulated)							
Alkalinity	2/28/01	410	ppm	NA	NA	NA	Erosion of natural deposits.
Calcium	2/28/01	71	ppm	NA	NA	NA	Erosion of natural deposits.

Synthetic Organic Compounds or SOC, such as Pesticides/Herbicides							
Component	Test Date	Results	Units	MCLG	MCL	Met drinking water standards?	Typical Sources
Waiver in place	12/31/03	ND	———	———	———	Yes	Farming, horticultural products.

(1) A TDS limit of 500 is desired in drinking water for reasons of palatability.
(2) Conductivity is a measure of an aqueous solution's ability to carry electric current.
(3) Secondary testing, EPA-regulated. There are no health risks associated with the presence of this component in your drinking water.
(4) Though this is state regulated, it is not a direct health issue. It is an indicator of the corrosiveness of the water, which may cause leaching of lead and copper into your tap water from your household plumbing. (See "Lead & Copper and Your Drinking Water" on page 5.)

What Is "Hard" Water?

"Hardness" in drinking water is caused by naturally occurring minerals, particularly calcium and magnesium. If calcium and/or magnesium is present in your water in substantial amounts, the water is said to be *hard* because making a lather or suds for washing is *hard* (difficult) to do. Water containing little calcium or magnesium is called *soft* water. The degree of *hardness* increases as the calcium and magnesium content becomes greater. Water becomes *hard* by picking up minerals as it moves through soil and rock. Because water is a good solvent, it picks up minerals easily. Although *hard* water can be a soap-scum and plumbing-fixture nuisance, it's not dangerous. Calcium and magnesium are essential nutrients that don't pose a public health hazard. *Hard* water is safe for drinking, cooking, and other household uses.

FORT CASEY SOURCE WELLS – Test Results

Inorganic Compounds or IOC							
Component	Test Date	Results	Units	MCLG	MCL	Met drinking water standards?	Typical Sources
Arsenic	6/25/08	2	ppb	NA	10	Yes	Erosion of natural deposits. Runoff from orchards; runoff from glass & electronics production wastes.
Barium	4/25/07	0.067	ppm	2	2	Yes	Discharge of drilling wastes; discharge from metal refineries; erosion of natural deposits.
Fluoride	4/25/07	0.5	ppm	4	4	Yes	Erosion of natural deposits; water additive which promotes strong teeth; discharge from fertilizer & aluminum factories.
Nitrate – N	9/24/08	<0.5	ppm	10	10	Yes	Runoff from fertilizer use; leaching from septic tanks; sewage; erosion of natural deposits.
Iron (3)	4/30/08	0.3	ppm	NA	0.300	Yes	Erosion of natural deposits.
Manganese (3)	4/30/08	0.16	ppm	NA	0.05	No (5)	Erosion of natural deposits.
Chloride	12/3/08	63	ppm	NA	250	Yes	Erosion of natural deposits, or seawater.
Sulfate	4/25/07	24	ppm	NA	250	Yes	Erosion of natural deposits.
Sodium	4/25/07	28	ppm	NA	NA	NA	Erosion of natural deposits, or seawater.
Hardness	4/25/07	310	ppm	NA	NA	NA	Erosion of natural deposits.
Conductivity (2)	4/30/08	660	Uhos/ cm	NA	700	No (4)	Erosion of natural deposits, or seawater.
Turbidity	4/25/07	0.4	NTU	NA	1	Yes	Combination of iron and manganese. Filter at treatment plant reduces the amount but does not remove all; this is the residual.
Color	4/25/07	<5	Color units	NA	15	Yes	Combination of iron and manganese. Filter at treatment plant reduces the amount but does not remove all; this is the residual.
TDS (1)	4/30/08	390	ppm	NA	500	Yes	Geologic, erosion of natural deposits.
Other Testing (not required or regulated)							
Alkalinity	2/28/01	290	ppm	NA	NA	NA	Erosion of natural deposits.
Calcium	2/28/01	59	ppm	NA	NA	NA	Erosion of natural deposits.
Synthetic Organic Compounds or SOC, such as Pesticides/Herbicides							
Component	Test Date	Results	Units	MCLG	MCL	Met drinking water standards?	Typical Sources
Waiver in place.	12/31/03	ND	———	———	———	Yes	Farming, horticultural products.

(1) A TDS limit of 500 is desired in drinking water for reasons of palatability.

(2) Conductivity is a measure of an aqueous solution's ability to carry electric current.

(3) Secondary testing, EPA-regulated. There are no health risks associated with the presence of these components in your drinking water.

(4) Though this is state regulated, it is not a direct health issue. It is an indicator of the corrosiveness of the water, which may cause leaching of lead and copper into your tap water from your household plumbing. (See "Lead & Copper and Your Drinking Water" on page 5.).

(5) These readings are prior to treatment. Our treatment facility reduces the amount of iron and manganese prior to distribution to our customers. Manganese post treatment ranged between <0.005 to 0.063 ppm.

Abbreviations and Explanation of Terms

Bacterial testing rotates within all the Town's well sites, 2 routine test samples are collected each month for a total of 24 samples collected and tested each year.

ppm = parts per million.

ppb = parts per billion.

mfl = million fibers per liter.

Uho/cm = micro mohs per centimeter.

AL = Action level

MCL =Maximum Contaminant Level = the highest level of a contaminant allowed in drinking water. MCL's are set as close to the MCLG's as feasible using the best available treatment technology.

• **MCL** = Zero tolerance for routine and repeat sampling of total coliform.

♦**MCL** = Zero tolerance for routine and repeat sampling of total coliform including a sampling for fecal coliform (E. coli).

MCLG = Maximum Contaminant Level Goal: The level of contaminant allowed in drinking water below which there is no known or expected risk to health. MCLG's allow for a margin of safety.

ND = Not Detected means that the component is **not detected** with laboratory testing equipment at this level (from < .10 to <.40).

NA = Not Applicable

Bacterial Contaminants: *Coliform Bacteria* are usually harmless, but their presence in water can be an indication of disease-causing bacteria.

Fecal Coliforms and E. coli are bacteria whose presence indicates that the water may be contaminated with human or animal wastes. Microbes in these wastes can cause short-term effects, such as diarrhea, cramps, nausea, headaches, or other symptoms. They may pose a special health risk for infants, young children and people with severely compromised immune systems. Testing for bacteria is done at 9 different sites throughout the town system.

Copper is an essential nutrient but some people who drink water that contains copper in excess of the action level over many years could suffer liver or kidney damage. The Action Level is exceeded if more than 10% of the homes tested have copper levels greater than 1.3 parts per million.

Lead can affect infants and children who drink water in which it is present in excess of the action level. Slight deficits in physical or mental development could be experienced in attention span and learning abilities. Adults who drink this water over long periods of time may develop kidney problems or high blood pressure. Exceeds the Action Level if 10% of the homes tested have lead levels greater than 15 parts per billion.

TDS: Total Dissolved Solids is a measure of the portion of solids that passes through a filter of 2.0 ppm **or** the solids retained by a filter. Dissolved solids may adversely affect the palatability of the water for the consumer; highly mineralized waters can be unsuited to industrial users as well. A limit of 500 ppm is desired in drinking water for reasons of palatability.

Conductivity is a measure of an aqueous solution's ability to carry electric current. High conductivity readings are partly due to high dissolved solids.

Asbestos: Potential sources include decay of asbestos cement water mains and/or erosion of natural deposits. Monitoring of asbestos is done due to the potential for some people who drink water with asbestos above the MCL over many years to have an increased risk of developing benign intestinal polyps.

Coupeville water is chlorinated. In water systems that are chlorinated, certain by-products form as a result of chemical reactions between chlorine and naturally-occurring organic matter in the water. This disinfection process is carefully controlled to remain effective, while keeping disinfection by-product levels low.

Health Issues and Questions

Specific Population Issues

Some members of the population are more vulnerable to contaminants in drinking water than the general population. Immuno-compromised people, such as those with cancer undergoing chemotherapy, people who have undergone organ transplants, people with HIV-AIDS or other immune system disorders, some elderly, and infants, can be particularly at risk from infections. These people should seek advice about drinking water from their health care providers.

Guidance is available from the SAFE Drinking Water Hotline (1-800-426-4791), and on EPA's web site at **www.epa.gov/safewater.**

Lead & Copper And Your Drinking Water Are You At Risk?

The Town's source waters do not contain lead or copper. However, lead and copper can leach into residential water from building plumbing systems containing copper plumbing, lead-based solder, brass fixtures or some types of zinc coatings used on galvanized pipes and fittings.

Homes built or plumbed with copper pipe prior to the lead solder bans of 1985, would likely have used lead-based solder, and are considered "high risk" by EPA's criteria. Brass fixtures, regardless of age, generally also contain some lead. Metals leach from plumbing systems when water has not been used and sits stagnant in the pipes for long periods of six or more hours.

If a home is "high risk" you may want to flush water that has been standing for six hours or longer, prior to using it for cooking or drinking. Many people flush until they notice the temperature change—usually less than 30 seconds. However, be "water smart" and use the flushed water for watering plants or washing dishes. You should never use hot tap water for cooking, drinking or making baby formula because hot water dissolves metals faster.

Customers wanting to have their water tested (for a fee) may call the Public Works Director at **360-678-4461** to obtain a list of independent testing labs in the area.

ΦHow Do We Protect Water Quality? Φ

- **Protect Groundwater**
  Even though our water system is from deep wells, we all need to take measures to not pollute groundwater sources. Properly dispose of waste products such as paint, used motor oil, anti-freeze, or cleaning products.

  Island County Solid Waste accepts various hazardous materials at no charge. Household hazardous waste in small amounts is accepted seven days a week from 9:30 a.m. – 5:00 p.m. except some holidays. Business hazardous waste is accepted by appointment only. See the scale attendant for directions and recording quantities. Call (360) 679-7386 for more information. The site is approximately 1.7 miles south of Coupeville on Highway 20.

ΦWhat can You do about Chlorine Taste and Odor?Φ

Chlorine kills organisms that may cause disease.
If you remove the chlorine with a filter, refrigerate the water to limit bacterial re-growth. You can also:

- Fill a pitcher and let it stand in the refrigerator overnight. (This is the best way.)
- Fill a glass or jar with water and let it stand in the sunlight for 30 minutes.

Town of Coupeville
Public Works
P.O. Box 725
Coupeville, WA 98239

Bulk Rate
Postage & Fees Paid
Town of Coupeville
Permit No. 34

ADDRESS SERVICE REQUESTED

Appendix R

Emergency Plan

EMERGENCY PLAN

A. PLAN OVERVIEW

This Emergency Plan covers the emergency repair of the water system infrastructure, and the response to low pressure and water quality complaints.

This plan will be used in conjunction with the Water Conservation Plan and Water Shortage Response Plan included in herein (Appendix M and Appendix N, respectively).

With good conservation (e.g., <475 gpd/ERU), the 330,000 gallons of useful reservoir storage at the twin 500,000-gallon Sunset Terrace reservoirs is adequate to meet the peak day demand of the present service population. Lowering the water level in the reservoirs will provided additional supply, but would reduce the pressure at to the customers near the reservoirs to less than 20 psi. This quantity of emergency storage should be used to initiate operation of one or more wells using emergency generators. With water conservation, Well Nos. 4 and 7 will provide adequate supply to replenish both Sunset Terrace reservoirs during maximum day demand conditions.

The reservoir is supplied from the following three operating sources and two standby sources:

Operating	Emergency
Fort Casey Well Field	In-Town Well No. 1
In-Town Well No. 4	In-Town Well No. 6
In-Town Well No. 7	

The Town maintains two portable 240 V generators for connection to Well Nos. 4 and 7. Well No. 6 is supplied from the emergency generator at the South Main Sewer Lift Station (sized to supply both the well and lift station).

The In-Town Well Nos. 1, 4 and 7 pump to the raw water tank at the In-Town treatment plant (not currently in operation). The water is then pumped to the Sunset Terrace reservoirs. The In-Town treatment plant is not equipped with an emergency generator. Therefore, to utilize Well Nos. 4 and 7 in an emergency, the wells must pump directly into the distribution system under manual control. Pressure in the system is maintained by the water level in the Sunset Terrace reservoirs. To operate in this fashion, the intertie between the distribution system and raw water line must be opened and the inlet valve to the In-Town treatment plan raw water tank closed. The intertie valve is located at the intersection of North Main Street and Fourth Street (shown on Sheet 8 of the Distribution System Drawings).

Well No. 6 pumps directly into the distribution system. Because this well does not have a water right, operation of this emergency source is subject to notification of the WA Department of Ecology (see Management and Operations Manual for further details).

Currently, the Fort Casey treatment plant and well field are not equipped with an emergency generator.

B. EMERGENCY TELEPHONE NUMBERS AND PERSONNEL

Response to all emergencies may be initiated by calling 9-1-1; the Town Marshal's Office and the Island County Sheriff Department maintain a list of the telephone number of Town staff.

The In-Town and Fort Casey water treatment plants are equipped with an Auto-dialer/alarm monitor that has the numbers of the town operational staff in the computer program. The telemetry system for the operation of the wells is currently located in the In-Town water treatment plant.

C. NOTIFICATION OF LOCAL AUTHORITIES

The following agencies shall be notified by a Commissioner, where required by statute, to request assistance, or to provide information for public inquiries:

The following agencies shall be notified by the Operator, where required by statute, to request assistance, or to provide information for public inquiries:

Mrs. Erika Lindsay, P.E. Regional Engineer WA Department of Health	(253) 395-6766 (877) 481-4901 *(after hour hotline)*
WA Department of Ecology	(425) 649-7000
Island County Health Dept.	(360) 679-7350
Island County Engineering Dept.	(360) 679-7300

The Town's **Public Works Director** shall be responsible for contacting the above and notifying customers for all emergencies, including coliform monitoring violations.

D. NOTIFICATION OF PUBLIC

For notification of the public for water emergencies such as issuance of an "acute health advisory", the Public Works Director shall utilize the Neighborhood Emergency Team (NET).

Volunteers from each of the Town's five designated neighborhoods have organized to respond to a variety of community emergencies. They have assessed their individual neighborhoods, and have maps identifying each building and contact person.

They have identified resources in the community, such as heavy equipment and operators, retired professionals in the medical, engineering and communications fields, who may be useful in a variety of situations.

In the event of a water or sewer emergency, they are prepared to go door to door with information; to assist the utility workers with distribution of potable water in the event of water line damage; to assist utility workers with manual operation of wells and treatment plants. Volunteers have also been assigned to areas outside of the Town limits, such as Madrona Way, for emergencies relating to the water system.

With a permanent staff of two utility workers, these 20+ volunteers can provide depth in the event of an emergency.

E. VULNERABILITY ASSESSMENT

The most likely emergencies will include the following:

- Complaint of low pressure
- Water main leak or break
- Complaint about water quality and/or positive bacteriological result from routine monitoring

Major and or wide-spread system failure may occur from the following:

- Fire at the well house or treatment building
- Landslides due to flooding
- Earthquake
- Chemical contamination of sources of supply

F. EMERGENCY RESPONSE

Complaint of low pressure

Complaints of low pressure should be referred to the public works director or in his absence the system operator maintenance supervisor. Hereinafter, the title "system operator" shall include all of these positions.

The operator should include the following actions in his investigation of the complaint:

- Verify that the source of supply pressure is normal.
- Reservoir is full
- Establish if low pressure is only apparent at the customer making the complaint. This may be done by checking the pressure at the meter to the customer making the complaint (remove meter and install pressure gauge), and the meter at the nearest customer.
- If the low pressure occurs at more than one home, check the distribution system for closed valves or leaks/breaks.

- If the low pressure is limited to one customer, check for closed main cock, leaking service pipe, or blocked meter or faulty meter check valve.
- If the pressure is normal at meter, recommended that customer contact plumber.

DO NOT undertake work on private property to correct a problem in the customer's plumbing system.

Water main leak or break

All system repairs will be done by system operator where possible.

The system operator has equipment and parts to accomplish most foreseeable repair work required in the system.

The Town should maintain the following minimum supply of materials at the In-Town treatment plan or Town shops to facilitate emergency repairs:

- Two lengths of 4, 6 and 8-inch AWWA C-900 Cl. 150 PVC pipe
- Two 4, 6 and 8-inch MJ ductile iron sleeves with joint materials
- 20 ft. each of 3/4 inch and 1-inch HDPE service tubing
- Brass fittings, connectors etc., for services
- Two 4, 6 and 8 inch x ¾-inch service saddles and corp stops.

- 300 feet of 2.5-inch fire hose with two sets of coupling adapters to connect fire hose to 2-inch IPS fittings

When the work cannot be accomplished by the system operator, the contractors listed in the Management and Operations Manual should be contacted.

Whenever possible, leaks in mains and services should be repaired without the shut down of the water main.

A water main break may need to be shut down for repair. When isolating the section of broken pipe, leave at least one gate valve slightly open to allow water to flow out of the broken section of pipe until dewatering equipment can remove the water surrounding the broken section of pipe. This is done to prevent groundwater and dirt from entering the broken section of pipe.

In the event of a water main break that shatters a section of pipe or otherwise allows groundwater to enter the main, contamination of the water pipe shall be assumed. As part of the repair procedure, the water system shall be disinfected with a high concentration of chlorine (e.g., 200 mg/L for 2 hours), and then flushed. Following flushing, a bacteriological sample will be collected from the customer at the downstream end of the system.

The system operator shall verbally notify all affected water consumers about the break, the disinfection procedure, and the need to boil water used for consumption until a satisfactory bacteriological test result is obtained from the lab.

Where a customer cannot be contacted immediately, a written notice will placed on the front door handle, and a follow-up visit will be made to confirm that the customer received notice about the break.

Upon receiving a satisfactory bacteriological test result, the system operator will verbally notify all affected water consumers as noted above.

Follow the emergency disinfection procedures outlined in AWWA Standard "Disinfecting Water Mains".

Disinfect all repair material with a 5 percent solution of sodium hypochlorite (bleach). Add chlorine to the open trench section as a precautionary measure; working in a wet trench exposes repair parts to groundwater, mud, etc.

If groundwater enters the broken pipe, a full disinfection by the "slug" method may be necessary. The chlorine dose for this method should be at least 500 mg/L.

Following the repair of a main break that requires dewatering of the system, to that confirm water quality is maintained, collect bacteriological samples, one upstream and one downstream of the break.

If a long period of time is necessary for the repair of a main, it may be necessary to provide temporary water supply to customers by:

- Using garden hoses to connect homes with water to those without, usually through the back yard hose bibs, and

- Using fire hose to run a temporary service main, and making connection to each meter setter.

All hoses used to provide temporary service connections should be disinfected.

Complaint about water quality and/or positive bacteriological result from routine monitoring

With respect to water quality issues, if a complaint indicates system contamination, or the results of water quality analysis shows that any maximum contaminant level (MCL) is exceeded, the system operator and manager shall follow the procedures set forth in WAC 246-290-320 (Appendix P).

Additional guidance on dealing with water quality complaints may be obtained from the following two publications:

Maintaining Distribution System Water Quality, 1985, published by the American Water Works Association.

Handling Water Quality Complaints, 1978, California-Nevada Section, AWWA

Backflow Incident Investigation Procedures, 1996, Pacific Northwest Section, AWWA

Corrective action may include the following, depending on the nature of the complaint or quality problem:

- Door-to-door or telephone notification of customers
- County and state Department of Health notification
- Public notification per WAC 246-290-330 and the Coliform Monitoring Plan (see Appendix Q).

Backflow Incident

Whenever the initial evaluation of a water quality complaint indicates that a backflow incident has occurred (potable water supply has been contaminated/polluted), may have occurred, or the reason for the complaint can not be explained as a "normal" aesthetic problem, a backflow incident investigation should be immediately initiated. It is wise to be conservative when dealing with public health matters.

Within 24 hours of knowledge of any incident of possible contamination of the potable water supply, both in the distribution system and/or in the customer's plumbing system, the state and county personnel listed above should be notified.

A backflow incident investigation is often a team effort. The investigation should be made or (initially) lead by the certified Cross Connection Control Specialist employed by the Town (see Appendix D). The investigation team should include local health and plumbing inspectors.

General guidance on how to respond to a backflow incident may be obtained from the manual BACKFLOW INCIDENT INVESTIGATION PROCEDURES, First Edition, 1996, published by the Pacific Northwest Section, American Water Works Association, P. O. Box 19581, Portland, Oregon, 97280, telephone 877-767-2992 (toll free).

The following points are included for initial guidance for dealing with a backflow incident; the above manual BACKFLOW INCIDENT INVESTIGATION PROCEDURES should be consulted as soon as possible.

- As soon as possible, notify customers not to consume or use water. Start the notification with the customers nearest the assumed source of contamination (usually the customer(s) making the water quality complaint).
- Give consideration to the distribution system as a potential source of the contaminant (e.g., air valve inlet below ground).
- Do not start flushing the distribution system until the source of contamination is identified. Flushing may aggravate the backflow situation, and will likely remove the contaminant before a water sample can be collected to fully identify the contaminant.
- Conduct a house-to-house survey to identify the source or contamination and the extent that the contaminant has spread through the distribution system.
- Isolate the portions of the system that are suspected of being contaminated by closing isolating valves; leaving one valve open to ensure that positive water pressure is maintained throughout the isolated system.
- Be sure to notify all affected customers in the isolated area, then the other customers in the system.

- The public health and plumbing authorities should deal with all customers that may have consumed the contaminant, or had their plumbing systems contaminated.
- Develop and implement a program for cleaning the contaminated distribution system.

Identification of the source and type of contaminant, and cleaning of a distribution system could take several days.

Most chemical or physical contaminants can be flushed from the water distribution system or customer's plumbing system with adequate flushing velocity. This may not be the case where scale and corrosion deposits (e.g., tuberculation on old cast iron mains) provides a restriction to obtaining adequate flushing velocity, or a chemical deposit or bacteriological slime (biofilm) on which the chemical contaminant may adhere.

To remove a chemical or physical contaminant, it may be necessary to provide a physical cleaning, using foam swabs (pigs), and/or to alter the form or the chemical contaminant, e.g., through oxidation using chlorination, or addition of detergents.

When adding any chemical (including chlorine) to remove a contaminant, it is essential that the chemistry of the contaminant is fully understood. The wrong chemical reaction could make the contaminant more toxic, more difficult to remove, or both.

Where both a chemical and bacteriological contamination has occurred, disinfection should follow the removal of the chemical contaminant.

Where any bacteriological contamination is suspected, field disinfection should be done. To disinfect water mains using the "slug" or "continuous flow" method, a field unit should be used for chlorine injection, such as a chemical feed - metering or proportioning pump for sodium hypochlorite.

G. GENERAL REFERENCE

For major emergencies, such as those listed in the vulnerability assessment, emergency response procedures will need to be developed at the time of the emergency.

For general emergency planning, the following references should be studied before an emergency situation occurs:

> *Emergency Planning for Water Utility Management (M19),* Third Edition, 1994, published by the American Water Works Association.

Appendix S

Corrosion Mitigation Plan

CORROSION MITIGATION PLAN

This Plan was incorporated into the 2003 Water System Plan. For reference, the plan is included in the 2009 to 2015 Water System Plan without alterations.

The principle change to this plan is the construction of the Keystone Hill well (Well No. 1-08) in Smith Prairie and the planned construction of additional well(s) in Smith Prairie for the Town's primary source of water. The In-Town wells will become standby sources for meeting maximum day demand periods and for emergency supply. This change is source of supply is also part of the Seawater Intrusion Mitigation Plan (See Appendix T).

I. PURPOSE

The purposes of this report are to:

A. Provide a brief description for Town Council of the lead and copper regulations and the Town's program for compliance.

B. Obtain approval of the WA Department of Health for the corrosion control measures outlined herein to reduce the levels of copper in the drinking water.

II. BACKGROUND

The US EPA requirement to sample lead and copper levels in drinking water is intended to determine the need for water treatment to provide corrosion control. Most of the lead and copper that occurs in the drinking water is the result of corrosive water. The "action levels" to trigger the need for treatment are 0.015 mg/L and 1.30 mg/L for lead and copper, respectively. These criteria are conservative. For example, the State's maximum contamination levels for lead is 0.050 mg/L.

Exceeding the action level does not establish that the water is harmful. It only establishes that the water is more corrosive than allowed by drinking water standards. Corrosive water may cause lead and copper to be dissolved from the consumers piping. This contributes to the total exposure of the consumer to lead and copper from all sources. The long-term intake of high levels of lead or copper, and the very high intake of lead and copper are a health concern.

Samples for monitoring the levels of lead and copper are collected from the customer's tap. Although a water purveyor only has responsibility for the quality of the water delivered to the customer at the meter, the purveyor is responsible for providing water that meets water quality regulations. The regulations includes criteria for supplying water that is essentially non-corrosive to copper piping, lead based solder used in plumbing systems, lead and copper impurities in plumbing fixtures, etc.

The Town first collected samples for monitoring of lead and copper levels in 1993. The action levels for lead and copper were not exceeded.

The samples collected in 2000 and 2001 exceeded the action level for copper. The detection of an increased copper level was due to a change made in water treatment for the In-Town wells. The level of copper is only slightly above the action level (1.47 mg/L compared with the action level of 1.30 mg/L).

This report describes the changes proposed in the operation of the system that will provide compliance. No changes involving alterations to the present water treatment or addition of chemicals are proposed. The proposed corrosion control program relies on the blending of the supply from the Town's wells in a manner that utilizes more water from sources that are the least corrosive.

III. DESCRIPTION OF SYSTEM

The System Schematic in the appendices shows the major component of the Town's water system. Additional details are provided below.

Sources of Supply

The Town presently obtains water from two groundwater fields, described as the In-Town Well Field and the Fort Casey Well Field, and one deep well.

The In-Town Well Field has three operating wells (designated Well Nos. 1, 4 and 7) and two monitoring well (Well Nos. 2 and 5). The deep well (Well No. 6) located at the high school, is used only as an emergency source of supply.

The Fort Casey Well Field has an abandoned cistern and infiltration gallery (designated Well No. 3), six operating wells (Well Nos. 3A, and 1-87 through 4-87), one monitoring well (Well No. 1-83) and one inactive well (Well No. 1-90).

All three of the In-Town operating wells discharge into a common transmission main supplying the In-Town water treatment plant. The combined production of the three In-Town wells is approximately 570 gpm. The combined WA Department of Ecology (WA DOE) water rights for the three wells is 670 gpm and 406 acre-feet per year. Due to concerns of seawater intrusion, Well #1 is approved by WA DOH for peak day use only.

The Fort Casey Well Field is located at Wanamaker Road and Keystone Road, approximately 5 miles southwest of the Town. The Fort Casey Well Field was originally developed in the early 1900's by the U.S. Army to supply Fort Casey. The system was purchased by the Town of Coupeville in 1950's. In 1975, utilizing a WA DOH grant, an additional 25 acres was purchased immediately to the north to provide a larger protected watershed. The well field now occupies a 55 acre tract of land.

The Fort Casey Well Field initially consisted of a cistern and infiltration gallery (Well No. 3). The WA DOE water rights are 150 gpm and 158 acre-feet per year. Well No. 3A was added to supplement the cistern and infiltration gallery.

In 1983, a 300 foot deep well (Well No. 1-83) was drilled near the cistern. This well was a "dry hole", and has recently been converted to a monitoring well for Well No. 3A. Well Nos. 1-87 through 4-87 were installed along the south end of the well field in 1987. Well No. 1-90 was drilled at the north of the well field, but not connected to the system.

Monitoring of the water quality in the cistern revealed that the infiltration gallery is under the influence of surface water. Rather than provide treatment to comply with US EPA regulations, the cistern and infiltration gallery were abandoned in 1997. The present production from the six operating wells is approximately 105 gpm.

To conserve groundwater in the aquifer supplying the In-Town Well Field, the Town's hydrogeologist recommended in 1995, and the Town has implemented, the change to the Fort Casey Well Field as the lead source of supply. The Fort Casey Well Field utilizes ground water from the outwash sands of the sea level aquifer. Approximately 4 to 8 inches of the 20 inches of mean annual precipitation is estimated to recharge the aquifer each year. The Coupeville/Fort Casey upland encompasses a recharge area of about 15 square miles. Four inches of annual precipitation over 15-square miles will provide about three million gpd of recharge to the underlying aquifers. During 1997, the Town used an average of 245,000 gpd (275 acre-feet per year).

In 1991, the Town drilled a 520 foot deep well, (Well No. 6), located within the Coupeville High School playing field. The long duration pumping test of the deep aquifer indicated seawater intrusion with the pumping of the Engle Farms well combined with the pumping of Well No. 6 at 200 gpm. The Engle Farms well, pumping alone appears to be in equilibrium with the aquifer recharge rate. No further testing was made to determine if Well No. 6 could be pumped at a rate lower than 200 gpm. Well No. 6 is equipped and remains connected as an emergency source of supply.

Water Quality and Treatment

In general, the water supplied to the customer is classified as very hard ground water (hardness greater than 180 mg/L). Water of this quality may cause white calcium deposits on faucets, in sinks, on glassware, and on the heating element in the hot water tank. The water also contains elevated levels of manganese and some hydrogen sulfide.

The water from Wells Nos. 1, 4 and 7 is pumped to the In-Town water treatment plant. Water treatment was installed in 1977. Treatment was by an electrodialysis reversal (EDR) process with a design production capacity (after treatment) of 366 gpm. Approximately 30 percent of the raw water supplied to the treatment plant was wasted as concentrated brine produced by the treatment process.

The electrical equipment for one of the two EDR units was damage beyond repair in 1995. In October 1996, The WA DOH approved the replacement of the (EDR) treatment equipment with oxidation and filtration equipment to remove iron, manganese and hydrogen sulfide, and to by-pass the existing treatment until the new equipment is installed. The new process will waste less than 5 percent of the source water. The reduction of waste helps to conserve the groundwater supply, and increases the production rate by approximately 125 gpm; the equivalent to a new well.

Prior to 1992, the water from the Fort Casey Well Field was treated for iron, manganese and hydrogen sulfide by the addition of a sequestering agent plus chlorination. The sequestering agent was unsuccessful in preventing the precipitation of manganese at the ends of the system. Its addition also raised concern about providing nutrients for bacteria regrowth in the distribution system.

Hydrogen sulfide remained a problem. In 1992, with WA DOH approval, the sequestering treatment was discontinued. Approval was obtained in October 1996 to install water treatment by oxidation and filtration. The new treatment system consists of pre-chlorination of the raw water to control iron and sulfate-reducing bacteria, followed in order by aeration in the raw water reservoir to remove some of the hydrogen sulfide, then aeration for full removal of hydrogen sulfide and oxidation of iron and manganese, then filtration with an oxide coated filter media (regular "BRIM"), then final chlorination for maintenance of a chlorine residual in the distribution system, then discharge into the product water reservoir.

As a precaution, the Town's policy is to maintain a minimum chlorine residual within the distribution system of 0.2 mg/L.

Storage

The Town's primary storage is located at two 500,000 gallon reservoirs on Pennington Hill. The reservoirs (designated the Sunset Terrace reservoirs) are of steel standpipe design, 65 feet in height, 37.5 feet in diameter. The reservoirs are located at the point of highest ground elevation within the Town. The top water level is 295 feet. The first reservoir was constructed in 1977; the second in 1996. Following the construction of the second reservoir, the first reservoir was rehabilitated and its base modified to improve its stability during an earthquake. The site piping was replaced with restrained joint ductile iron pipe, and earthquake (flexible) couplings were installed at the reservoir isolating valves.

The present useful storage from the two Sunset Terrace reservoirs is only 333,300 gallons, due to the tank's limited height. The balance of storage in the Sunset Terrace reservoirs is needed to maintain system pressure above 20 psi at the high elevations within the Town. To increase the amount of useful storage, a booster pump station and high elevation service area is planned for Pennington Hill.

Due to its poor condition, the 500,000 gallon reservoir on Engle Road (located approximately 1.5 miles south of Town) was removed from service in 1997. Two storage reservoirs containing 130,000 gallons were installed at the Fort Casey Well Field in 1998.

Both water treatment plants have raw water and product water storage reservoirs. The In-Town plant has 25,000 gallons of both raw and product storage. The Fort Casey plant has 23,000 gallons of raw water storage and 105,000 gallons of product water storage.

Distribution System

The Town maintains approximately 12 miles of distribution mains within the Town limits and 13 miles outside of the Town. The system has 92 fire hydrants, and approximately 825 service connections of various size. All service connections are metered.

The water pressure in the distribution system ranges from 20 psi on the top of Pennington Hill to 127 psi at sea level.

IV. DISCUSSION

Internal corrosion of copper pipe may be uniform and/or localized. Uniform corrosion occurs when the metal corrodes at approximately the same rate over the entire surface. Localized corrosion usually takes the form of pitting, erosion, and/or galvanic reaction of dissimilar metals (e.g., battery).

General corrosion (leaching) is normal for "soft" water (pH below 7). Galvanic and pitting corrosion are common for very hard water. Corrosion is reduced by the formation of a passive protective film on the inside of piping. Calcium helps form a protective film with alkalinity. New copper piping would have a high corrosion rate until a protective film is formed.

The spreadsheet provided in Appendix B shows the results for lead and copper monitoring in 1993 (first set of samples), December 1999 (second set of samples) and October 2000 (third set of samples). The first set of samples showed low levels of both lead and copper. The 1999 and 2000 samples showed the "action level" exceeded for copper. . The action level for lead was not exceed because of the absence of lead piping and significant use of lead-tin solder.

Also included in Appendix B is a spreadsheet showing the major water quality parameters from the In-Town and Fort Casey water treatment plants.

As it relates to corrosion, there is a significant difference in the water quality supplied to the customer in 1993 and 1999. The In-Town electrodialysis treatment system operating in 1993 was designed to reduce the levels of chloride from Well No. 1 to below 250 mg/L. Although this was never needed (Well No. 1 was not utilized as a major source of supply), the side benefits of the electrodialysis were to reduce the Total Dissolved Solids, conductivity and chlorides.

Total Dissolved Solids (TDS) is a measure of the total ions in solution. Although high TDS waters have not been shown to be harmful, the US EPA recommends a maximum (MCL) of 500 mg/L in drinking water supplies. Above this level the water may have an increasing salty taste.

Conductivity (also known as specific conductance) is a measure of the ionic activity of a solution in terms of its capacity to transmit electrical current.

Together, TDS and conductivity are important in their effect on the corrosive properties of water and in their effect on the solubility of slightly soluble compounds such as calcium carbonate (CaCO3). In general, as TDS and conductivity increases, the corrosivity of the water increases (all other factors remaining constant).

Chlorides break down the protective film.

With removal of the electodialysis treatment system, there was a significant increase in the conductivity, TDS and chloride levels. In 1999, because the Fort Casey treatment plant was not in operation, 83 percent of the water came from the high conductivity, TDS and chloride source of supply.

The mix was changed in 2000, with a corresponding reduction in average copper levels. Also contributing to the reduction in 2000 was a more appropriate selection of the 20 sample location (e.g., removed from the sampling program were customers with water softeners).

V. RECOMMENDATIONS

The recommended corrosion control plan for the Town is to utilize to the fullest extent possible the source of least corrosive water: the Fort Casey well field. To obtain the greatest benefit from this source related to corrosion control, the following is necessary:

1. Change the telemetry control for source operation to minimize the use of the In-Town wells.

   At the present, if priority two and three water levels are reached in the Sunset Terrace reservoirs, the In-Town wells will be brought into operation. Unfortunately, both the In-Town and Fort Casey supplies will continue to operate until the reservoirs are full. The In-Town wells are not shut off when the water level is recovered above the priority two level. Adding to the unwanted use of the In-Town wells is the current batch operation of Fort Casey. It is possible that the Fort Casey supply is interrupted to recover the Fort Casey product tank level, leaving the Sunset Terrace reservoirs to be filled mostly by the supply from the In-Town wells.

   Appendix D includes a scheme for new probes in the Sunset Terrace Reservoir to allow more flexibility in the control of the sources of supply.

2. Connect Well 1-90, both to increase production from Fort Casey and to utilize its less corrosive water. As noted in the table of water quality parameters in Appendix B, Well 1-90 has chemistry nearly equal to the product from the In-Town eletrodialysis treatment system.

   Reduce the use of Well No. 3A during the winter months, when the system demand can be supplied from Fort Casey alone. Well No. 3A may be throttled or turned off by the operator when feasible.

3. Add additional wells in the north portion of the Fort Casey well field. All of groundwater from wells in the north portion should have similar quality.

4. Remove Well 3a from service. The high chloride level is a concern both with respect to seawater intrusion and the corrosive properties of its water.

VI. SCHEDULE

The following task numbers relate to the list of recommendation. The sub-categories under each task delineate the monitoring or other associated work related to the task.

Task	Description	Completion Date
1	Modify source pumping control, install new level probes in the Sunset Terrace reservoir	July 2001
1a	Modify sampling locations to include sites receiving only Ft. Casey Water (for comparison with In-Town sites)	June 2001
1b	Start monitoring of water quality at Sunset Terrace Reservoirs to assess mixing, modify level probes as needed.	July 2001
1c	Collect tap samples to monitor the increased use of Ft. Casey water	November 2001
2	Bring Well No. 1-90 into operation, Blending to reduce chloride level in Ft. Casey wells.	November 2001
2a	Collect tap samples to monitor the further increase in the use of Ft. Casey water with Well 1-90 operating	March 2002
2b	Collect tap samples to monitor the further increase in the use of Ft. Casey water with Well 1-90 operating	May 2002
3 and 4	Bring second well in upper well field on line to augment Well 1-90, remove Well 3A from service (retain as standby)	Date to be set based on results of 2a and 2b

The schedule to bring Well No. 1-90 into operation is dependent on the WA Department of Ecology issuing a Groundwater Permit for the upper portion of the well field. WA DOH has agreed to issue a permit in June 2001.

The construction time for the installation of the power supply and 6-inch main to the north portion of the well field, and equipping of Well No. 1-90 is four month. The WA DOH approval of the use of the well, after receipt of a project report, could be expected within four to six weeks. The November 2001 date to place Well No. 1-90 reflects the above time for construction and obtaining regulatory approval.

The timing of tasks 3 and 4, the increase in production from additional wells in the upper portion of the Fort Casey well field and abandonment of the high chloride well in the lower portion (Well 3A) will depend on the results of the lead and copper monitoring in March and May of 2002.

Changes to the control of the well sources (Task 1) will be done by the Town as normal maintenance.

The monthly monitoring of selected water quality parameters from the two treatment plants and the Sunset Terrace reservoirs will give an indication of the effectiveness of the change in the well controls (Task 1) in increasing the portion of water supplied from Fort Casey.

The following recent results for selected water quality parameters related to corrosion can be used to monitor the mixing of In-Town and Fort Casey Water:

PARAMETER	UNITS	In-Town WTP SO 4	Ft. Casey WTP SO 6	Sunset Terrace Reservoirs
Chloride	mg/L	85	65	
Hardness	mg/L	440	320	
Alkalinity	mg/L	410	290	350
Conductivity	umhos/cm	1000	735	
Total Dissolved Solids	mg/L	620	440	

Because of the availability of a conductivity meter (used at the wastewater treatment plant), monthly or more frequent field measurements of conductivity will be used as the primary parameter. Laboratory results for all parameters will be obtained quarterly for quality control.

Conductivity measurements will also be made at the house sample locations when collecting samples for monitoring of lead and copper.

Appendix T

Seawater Intrusion Mitigation Plan

OPERATION AND MAINTENANCE TASK SUMMARY

See Operations and Maintenance Manual for details.

Description	Schedule	Status
Hydrant inspection and exercising	Annually	By Fire Department
Line valve inspection and exercising	Annually	Performed annually starting in 2009
Blow-off inspection and exercising	Annually	Performed annually starting in 2009
Air release valve inspection	Every 3 years	Now scheduled for every 3 years.
Source meters testing and maintenance /calibration	Annually	Performed annually starting in 2009
Source meter reading	Daily	For leak detection, with summer daily readings to establish MDD for design
Large customer meter testing and replacement	Every 3 years	Not done for several years. Resumption of program scheduled for 2009.
Small customer meter testing and replacement	none	Not currently scheduled. Meters on 15-year replacement schedule
Water main flushing	Biannually	All major mains flushed in spring and fall, periodic flushing of small mains
Reservoir cleaning	Every 3 years	Clean and inspected by underwater divers
Well rehabilitation	Every 3 years	For all production wells, surging and acid treatment to remove iron and manganese.
Well water level and chloride measurement	Monthly	Static and pumping level measurements Pump performance monitoring twice per year
Pumping stations	Weekly	General check, pump performance monitoring twice per year
Treatment systems and Chlorination	Daily	Field test kits for daily monitoring, Lab results obtained every three months from treatment for monitoring Mn & Fe
PRV Stations	Every 3 years	General maintenance of pressure reducing valves. Weekly check of vault.
Backflow assembly testing	Upon installation and annually thereafter	Customer owns assemblies for premises isolation.

In 1994 the Town's hydrogeologist, recommended:

1. Using the Fort Casey well field as the lead source of supply.

2. Withdrawing water from wells in the north portion of the well field where there is a low risk for seawater intrusion. The full utilization of the Fort Casey source reduces the use of the In-Town Well Nos. 4 and 7 to summer high water demand periods, and the use of Well Nos. 1 and 6 to emergencies. This significantly reduces the present risk of seawater intrusion in the In-Town portion of the aquifer. Also, the In-Town wells have higher levels of electrical conductivity and total dissolved solids. These two parameters are classified as secondary, non-health related contaminants. However, they cause the water to be corrosive to copper piping. With the use of the Fort Casey source, the Town complies with the US EPA lead and copper rules, eliminating the need for chemical treatment of the water from the In-Town wells.

The Town's hyrogelogist subsequently recommended development of wells along Keystone Hill Road further north from the Fort Casey Well Field.

A key part of the Town's seawater mitigation plan has been water conservation. The Town has successfully maintained a very effective water conservation program, reducing the maximum day demand per equivalent single-family residential customer (ERU) to about half of the WA DOH design guideline of 800 gpd/ERU.

The *2003 Water System Plan* proposed if an inter-local agreement can be reached with Island County, and a change in water rights place of withdrawal and place of use can be obtained from the WA Department of Ecology, the Town should connect the County's Patmore Road well to the Fort Casey well field. Then when needed for additions supply, connect the Rhododendron Park well to the Fort Casey well field and increase the Fort Casey water treatment plant capacity by the addition of one treatment train.

The County's Patmore Well was found unsuitable for use by the Town. In 2008 the Town drilled a new well on Keystone Hill Road (Well No. 1-08).

The WA Department of Ecology approved the water right change with the provision that to eliminate the likelihood of seawater intrusion the Town would transfer production from its In-town wells to the Keystone Hill Road area.

B. CURRENT MITIGATION PLAN

The Town's plan to reduce the risk of seawater intrusion is base don utilization of the wells developed in the upper portion of the Fort Casey well field (currently Well NOs. 1-90 and 1-06) and wells in Smith Prairie (currently Well No. 1-08). The plan includes the following work:

Task	Description
1	Connect Well No. 1-08 to the Fort Casey raw water transmission line now connected to Well Nos. 1-90 and 1-08. Increase production through the Fort Casey treatment plant to 200 gpm (current plant capacity).
2	Disconnect Well 1 and remove well as source of emergency supply (current status). Retain well for monitoring.
3	Purchase site for additional well in Smith Prairie. It is assumed that the site will be along the raw water transmission main from Well 1-08.
4	Drill and equip a second well in Smith Prairie to replace Well No. 4 as an operating source.
5	Increase the Fort Casey treatment plant capacity from 200 to 400 gpm.
6	Drill and equip a third well in the upper portion of the Fort Casey well field if needed to provided blending of water quality to meet the arsenic MCL.
7	Disconnect Well No. 4 and remove well as an operating source. Place the well on emergency status.
8	Drill and equip a third well in Smith Prairie to replace Well No. 7 as an operating source.
9	Increase capacity of the Fort Casey treatment plant or provide a dedicated treatment for the new well. The option for a separate treatment plant will depend on the ability to provide a new transmission line to Town form this source.
10	Disconnect Well No. 7 and remove well as an operating source. Place the well on emergency status.

To meet the arsenic MCL, the water from the upper portion of the Fort Casey well field that contains iron will be blended with the water from wells in Smith Prairie that contain arsenic. Arsenic with adequate oxidation will combine with iron in a ratio of approximately 1 mg/L of arsenic to 20 mg/L of iron. The Fort Casey treatment plant is designed to remove iron and manganese.

The long transmission line from the Fort Casey water treatment plant via Engle Road places the Town in a vulnerable position of being cut off from its Out-of-Town source of supply (water main break or fire in the treatment plant). The retention of the In-Town Well Nos. 4 and 7 as emergency sources is an essential part of the Town emergency plan. Since these wells will not be used as sources of supply, there would be an insignificant impact on seawater intrusion during there limited use in an emergency.

C. SCHEDULE

The Town has scheduled the above Task 1 in 2009 or as soon as a loan is secured from the State Public Works Board, Drinking Water State Revolving Fund or Economic Recovery Program.

The remaining tasks will continue as the Town's current debt from past bonds is retired, thereby providing funds to pay back new debt, or from water hookup right fees from new customers. The schedule will also depend on the demand of additional supply.

D. MONITORING PROGRAM

Based on the Town's hydrogeologist's recommendations, the following monitoring program has been implemented by the Town:

1. All wells are monitored monthly for chloride and conductivity.

2. Static water level measurements are made monthly at all wells.

3. Pumping level measurements are measured monthly at all operating wells.

Appendix U

Maintenance Program

OPERATION AND MAINTENANCE TASK SUMMARY

See Operations and Maintenance Manual for details.

Description	Schedule	Status
Hydrant inspection and exercising	Annually	By Fire Department
Line valve inspection and exercising	Annually	Performed annually starting in 2009
Blow-off inspection and exercising	Annually	Periodic, not currently performed annually
Air release valve inspection	Every 3 years	Periodic, not currently performed annually
Source meters testing and maintenance /calibration	Annually	Periodic, not scheduled annually Annual testing scheduled for 2009
Source meter reading	Daily	For leak detection, with summer daily readings to establish MDD for design
Large customer meter testing and replacement	Every 3 years	Not done for several years. Resumption of program scheduled for 2009.
Small customer meter testing and replacement	none	Not currently scheduled. Meters on 15-year replacement schedule
Water main flushing	Biannually	All major mains flushed in spring and fall, periodic flushing of small mains
Reservoir cleaning	Every 3 years	Clean and inspected by underwater divers
Well rehabilitation	Every 3 years	For all production wells, surging and acid treatment to remove iron and manganese.
Well water level and chloride measurement	Monthly	Static and pumping level measurements Pump performance monitoring twice per year
Pumping stations	Weekly	General check, pump performance monitoring twice per year
Treatment systems and Chlorination	Daily	Field test kits for daily monitoring, Lab results obtained every three months
PRV Stations	Every 3 years	General maintenance of pressure reducing valves. Weekly check of vault.
Backflow assembly testing	Upon installation and annually thereafter	Customer owns assemblies for premises isolation.

Appendix V

Safety Program

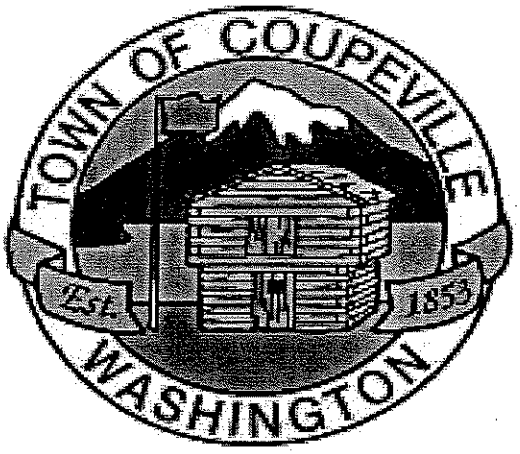

Accident Prevention Manual

Prepared by Town of Coupeville Safety Committee October 21, 2005

Section I 3
Introduction 3
1.01 Purpose 3
1.02 Scope and Applicability 3
1.03 Enforcement 3
1.04 Management Responsibility 4
1.05 Supervisor Responsibility 5
1.06 Employee Responsibility 6
1.07 Interpretation of the Regulations 6
1.08 Revisions 6
1.09 Governmental Safety Standards 6
1.10 Safety Bulletin Board 7
1.11 Manager/Supervisor Meetings 7
Section II Accidents and Injuries 8
2.01 Employee Responsibility 8
2.02 Personal Injury and Emergency 8
2.03 Release for Work After Injury 9
2.04 Return to Work Program 9
2.05 Vehicle Accidents 9
2.06 Disaster Emergency 10
2.07 Accident Investigation 10
2.08 First Aid – Blood-borne Pathogen 11
Section III 11
General Safety 12
3.01 Personal Conduct 12
3.02 Job Hazards 12
3.03 Housekeeping 13
3.04 Personal Protective Equipment 13
3.05 Handling of Materials 14
3.06 Motor Vehicles 15
3.07 Fire Prevention 15
3.08 Safety Inspection Procedures 16
Section IV 17
Work Area Safety 17
4.01 Work Area 17
4.02 Office and Clerical Safety 17
4.03 Elevated Positions 18
4.04 Underground Installations 19
4.05 Sewers, Pits and Treatment Plants 19
4.06 Electrical Facilities 20
4.08 Transporting of Equipment 22
4.09 Trenching and Excavating 23
Section V 23
Equipment Safety 23
5.01 Drill Presses 23
5.02 Abrasive Grinders 24
5.03 Powered Machine Tools 24

5.04 Portable Power Tools 25
5.05 Mechanized Equipment 26
5.06 Mechanical Load Handling Equipment 26
5.07 Mechanical Lifting and Aerial Equipment 27
5.08 Hand Tools 28
5.09 Battery Maintenance (WACs 296-155-437, 296-56-60245 & 296-24-23015) 29
5.10 Gas and Arc Welding Safety 30
5.11 Compressed Air Tools 31
5.12 Power Saws/Chainsaws 31
5.13 UV Disinfection 32
5.14 Lockout Procedures 32
Section VI 33
Hazardous Communications 33
6.01 Purpose 33
6.02 Procedure 34
6.03 Program 34
6.03 List of Chemicals 36
Section VII 36
Fall Protection/Rescue 36
7.01 Fall Restraint (WAC 296-155-24510) 36
7.02 Fall Arrest (WAC 296-45-25510) 37
7.03 Fall Hazards 37
Appendices: 37
A.01: Employee's Incident/Near Miss Report 37
A.02: Supervisor's Incident/Near Miss Report 37
A.03: Employee Safety Orientation Checklist 37
A.04: Departmental Safety Training 38
A.05: Refusal to Seek Medical Care 38
A.06: Safety Programs by Department 38
A.07: Confined Space Entry, South Main Lift Station 38
A.08: Confined Space Entry Permit 38

Appendix W

Financial Viability Assessment

		BASE YEAR 2008	SIX-YEAR OPERATING BUDGET YEAR 1 2009	YEAR 2 2010	YEAR 3 2011	YEAR 4 2012	YEAR 5 2013	YEAR 6 2014
REVENUES								
1	Water Rates, Commodity	$336,213	$326,127	$327,471	$328,822	$330,177	$331,538	$332,905
2	Water Rates, Fixed Monthly	$217,546	$221,555	$222,115	$222,675	$223,235	$223,795	$224,355
3	Fees, Connection	$18,000	$18,000	$18,000	$18,000	$18,000	$18,000	$18,000
4	Other Revenue	$4,165	$4,000	$4,000	$4,000	$4,000	$4,000	$4,000
5	Bank interest	$5,133	$2,000	$2,000	$2,000	$2,000	$2,000	$2,000
6	Total Revenue (1 to 5)	**$581,057**	**$571,682**	**$573,586**	**$575,496**	**$577,412**	**$579,333**	**$581,259**
EXPENSES - OPERATIONS								
7	Certified operator(s) expenses	$65,446	$67,409	$69,432	$71,515	$73,660	$75,870	$78,146
8	Equiv. of Salaries (pro-bono)	$0						
9	Power & Other Utilities	$52,514	$52,500	$48,000	$48,000	$48,000	$48,000	$48,000
10	Chemicals & Treatment	$9,974	$10,000	$10,000	$10,000	$10,000	$10,000	$10,000
11	Monitoring	$3,513	$3,500	$3,500	$3,500	$3,500	$3,500	$3,500
12	Materials, Supplies & Parts	$26,643	$30,000	$30,000	$30,000	$30,000	$30,000	$30,000
13	Transportation Expenses	$2,380	$2,500	$2,500	$2,500	$2,500	$2,500	$2,500
14	Miscellaneous Expenses	$4,027	$4,000	$4,000	$4,000	$4,000	$4,000	$4,000
15	Total - Operations (7 to 14)	**$164,497**	**$169,909**	**$167,432**	**$169,515**	**$171,660**	**$173,870**	**$176,146**
EXPENSES - GENERAL ADMIN.								
16	Salaries & F.B. [Note 1]	$72,937	$75,125	$77,379	$79,700	$82,091	$84,554	$87,091
17	Transfer to gen. administration	$39,496	$40,681	$41,901	$43,158	$44,453	$45,787	$47,160
18	Office Supplies/Postage/Rent	$1,995	$2,000	$2,000	$2,000	$2,000	$2,000	$2,000
19	Insurance [2]	$5,369	$5,500	$5,500	$5,500	$5,500	$5,500	$5,500
20	Accounting (audit)	$5,388	$5,500	$5,500	$5,500	$5,500	$5,500	$5,500
21	Legal	$0	$1,000	$1,000	$1,000	$1,000	$1,000	$1,000
22	Engineering & Surveying	$29,974	$30,000	$30,000	$30,000	$30,000	$30,000	$30,000
23	Fees & taxes [3]	$34,633	$35,000	$35,000	$35,000	$35,000	$35,000	$35,000
24	Miscellaneous Expenses [4]		$1,000	$1,000	$1,000	$1,000	$1,000	$1,000
25	Total - Admin. (16 to 23)	**$189,792**	**$195,806**	**$199,280**	**$202,859**	**$206,544**	**$210,341**	**$214,251**
26	Depreciation Expenses	na	na	na	na	na	na	na
27	**TOTAL EXPENSES** (15+25+26)	**$354,289**	**$365,715**	**$366,712**	**$372,373**	**$378,204**	**$384,211**	**$390,397**

See page 4 for notes

		BASE YEAR 2008	SIX-YEAR OPERATING BUDGET YEAR 1 2009	YEAR 2 2010	YEAR 3 2011	YEAR 4 2012	YEAR 5 2013	YEAR 6 2014
28	Taxes (property + B & O)	$28,123	$28,123	$28,123	$28,123	$28,123	$28,123	$28,123
29	Current Debt Payments (P & I)	$109,707	$139,240	$139,240	$139,240	$139,240	$139,240	$139,240
30	Added Debt (P & I) (for line 33)		$29,533					
CAPITAL IMPROVEMENTS								
31	New Facilities							
	a) Wells		$545,000	$51,500		$96,160		
	b) Treatment Plants						$42,769	
	c) Storage and Pumping		$108,000					
	d) Telemetry		$80,000					
	e) Miscellaneous [5]		$8,000	$44,290	$8,488	$8,741	$13,506	$9,275
32	Water Mains							
	a) In-Town, Extensions							
	b) Out-of-Town, Extensions							
	c) In-Town, Replacements		$136,000					
	d) Out-of-Town, Replacements							
	Sub-total		*$877,000*	*$95,790*	*$8,488*	*$104,901*	*$56,275*	*$9,275*
CAPITAL SOURCES								
33	Loan/Bond Funds	$0	$507,000					
34	Withdrawal from Ex. Reserves		$370,000	$95,790	$8,488	$104,901	$56,275	$9,275
35	**NET C.I.P.** (31 to 32) - (33 & 34)							
RESERVES - OPERATING CASH								
36	Target Minimum Balance [6]		From operating reserve for general fund					
37	Annual Installment							
38	Running Balance	$0	$0	$0	$0	$0	$0	$0
RESERVES - EMERGENCY [7]								
39	Target Minimum Balance [8]	$50,000	$50,000	$50,000	$50,000	$50,000	$50,000	$50,000
40	Annual Installment from W Rates							
41	Annual Installment from Fees							
42	Running Balance	$250,000	$250,000	$250,000	$250,000	$250,000	$250,000	$250,000
RESERVES- CAPITAL								
43	Balance end of 2008	$778,138						
44	Annual Installment from W Rates		$20,000	$21,000	$17,000	$13,000	$9,000	$5,000
45	Annual Installment from Fees		$18,000	$18,000	$18,000	$18,000	$18,000	$18,000
46	Annual Withdrawal (line 34)		-$370,000	-$95,790	-$8,488	-$104,901	-$56,275	-$9,275
47	Running Balance	$528,138	$196,138	$139,348	$165,860	$91,959	$62,684	$76,409

			SIX-YEAR OPERATING BUDGET					
	BASE YEAR 2008	YEAR 1 2009	YEAR 2 2010	YEAR 3 2011	YEAR 4 2012	YEAR 5 2013	YEAR 6 2014
TOTAL REVENUE REQUIRED							
48 (lines 27 to 30,35,37,40,41,44,45)							
BUDGET SURPLUS (DEFICIT)							
49 (line 5 - line 48)		$603	$512	$761	$845	$760	$500

			SIX-YEAR PROJECTION OF INCOME FROM RATES AND CHARGES					
	BASE YEAR 2008	YEAR 1 2009	YEAR 2 2010	YEAR 3 2011	YEAR 4 2012	YEAR 5 2013	YEAR 6 2014
MONTHLY SERVICE FEE INCOME							
a) Number of accounts [9]							
In-Town 78%	857	859	861	863	865	867	869
Out-of-Town 22%	243	244	245	246	247	248	249
b) Income from present fees							
In-Town 69.9%		$154,538	$154,858	$155,178	$155,498	$155,818	$156,138
Out-of-Town 30.1%		$66,457	$66,697	$66,937	$67,177	$67,417	$67,657
c) Income from new accounts							
In-Town	na	$320	$320	$320	$320	$320	$320
Out-of-Town	na	$240	$240	$240	$240	$240	$240
d) Sub-total		**$221,555**	**$222,115**	**$222,675**	**$223,235**	**$223,795**	**$224,355**
WATER COMMODITY INCOME							
e) Volume sold (gallons/year)							
In-Town 74%	67,443,164	67,443,164	67,712,937	67,983,788	68,255,723	68,528,746	68,802,861
Out-of-Town 26%	23,790,494	23,790,494	23,885,656	23,981,199	24,077,123	24,173,432	24,270,126
Allowance for wet summer	na	-2,737,010	-2,737,010	-2,737,010	-2,737,010	-2,737,010	-2,737,010
f) Income with present rates							
In-Town		$248,798	$249,793	$250,792	$251,795	$252,802	$253,814
Out-of-Town		$87,415	$87,765	$88,116	$88,469	$88,822	$89,178
Allowance for wet summer	na	-$10,086	-$10,086	-$10,086	-$10,086	-$10,086	-$10,086
g) Sub-total		**$326,127**	**$327,471**	**$328,822**	**$330,177**	**$331,538**	**$332,905**
TOTAL OF RATE & CHARGES							
CONNECTION INCOME							
h) In-Town connections	na	$9,000	$9,000	$9,000	$9,000	$9,000	$9,000
I) Out-of-Town connections	na	$9,000	$9,000	$9,000	$9,000	$9,000	$9,000
TOTAL OF CONNECTION FEES		**$18,000**	$18,000	$18,000	$18,000	$18,000	$18,000

FINANCIAL VIABILITY TEST SUMMARY

		YEAR 1 2009	YEAR 6 2014
A 1	REVENUES		
A 2	Water Rates (lines 1+2)	$547,682	$557,259
A 3	Total other revenues (3 to 5)	$24,000	$24,000
A 4	Total revenue (A2+A3)	**$571,682**	**$581,259**
A 5	EXPENSES		
A 6	O&M, Adm, etc. (line 27)	$365,715	$390,397
A 7	Taxes (28)	$28,123	$28,123
A 8	Debt Payment (29)	$139,240	$139,240
A 9	CIP from rates	$0	$0
A 10	Add to Oper. Reserve	$0	$0
A 11	Add to Emer. Reserve	$0	$0
A 12	Add to Repl. Reserve	$38,000	$23,000
A 13	Total Revenue Req'd. (A6 to A12)	**$571,078**	**$580,760**
A 14	REVENUE - EXPENDITURES	$603	$500
A 15	Line A 4 greater than A 13 (Y/N)	YES	YES
	HOUSEHOLD INCOME		
D 26	Medium Income	$58,857	$64,983
D 27	Medium Income x 0.015	$883	$975
D 28	Number of ERUs		
	Single-family	760	772
	Commercial equivalent	432	438
	Total ERUs	1,192	1,210
D 29	Req'd Revenue/ERU (A13/D 28)	$480	$480
D 30	Line D 27 greater than D 29	YES	YES

		YEAR 1 2009	YEAR 6 2014
	OPERATING RESERVES		
B 16	Current Operating	NA	NA
B 17	Budgeted Increase (42)	NA	NA
B 18	Total Reserve (43)	NA	NA
B 19	REQUIRED OPERATING CASH RESERVES (line A 6 x 0.125) **SEE NOTE 6**	NA NA NA	NA NA NA
B 20	Line B 18 greater than B 19	NA	NA
	EMERGENCY RESERVES		
C 21	Current Emergency	$250,000	$250,000
C 22	Budgeted Increase	$0	$0
C 23	Total Reserve (47)	**$250,000**	**$250,000**
C 24	COST OF MOST VULNERABLE FACILITY [8] (well replacement)	**$50,000**	**$50,000**
C 25	Line C 23 greater than C 24	YES	YES

TABLE NOTES:

[1] Town staff only, operators listed in item 7
[2] Include vehicles, general liability & worker comp.
[3] Include sales tax if applicable, e.g., on water sold
[4] Includes training
[5] Such as storage building, meter replacement program
[6] Included with Town operating reserve for general fund
[7] Includes $50,000 for emergency and $200,000 for capital projects, such as relocation required by County
[8] Assumed to be drilling & equipping new well
[9] Accounts include unconnected customers.

GENERAL NOTES:

[a] Assumed inflation rate for capital/maintenance costs 3.0%
[b] Assumes increased in debt financing for DWSRF 1.5%
[c] Assumed average number of new connection/year
In-town 2
Out-of-Town 1
[d] F-W-S water rate: $3.68 per 1,000 gallons (in-Town)
Summer water rate: $5.51 per 1,000 gallons (in-Town)
[e] All water hookup right fees (equity in system) are allocated to capital reserve fund
In-Town fee $4,500
O-O-Town fee $9,000
[f] Assumed added consuption/new customer 70,000 gallons/year/ERU
[g] Out-of-Town water rate surcharge = 50%

WATER SYSTEM SIX-YEAR CAPITAL PLAN

Priorities: 1 - High; 2 - Moderate; 3 - Low				ESTIMATED COST (2008 $)	CONSTRUCTION SCHEDULE Six-Year Plan 2009	2010	2011	2012	2013	2014	20-Year Plan 2015 to 2029
I FACILITIES											
A Wells											
1 Purchase of well easement				$50,000		1					
2 Ft. Casey emergency generator, 140 KW				$50,000				1			
3 Keystone Hill raw water line	6,525 ft	6"	{a}	$425,000	1						
4 Equip Well 1-08			{a}	$82,000	1						
5 Abandon Well No. 1				$16,000							3
6 Rehabilitate Wells 4 & 7			{b}	$38,000				1			ongoing
7 Rehabilitate Wells 1-90 & 1-06			{b}	$38,000	1				1		ongoing
8 Abandon Cistern & Infil. Gallery				$40,000							3
9 Abandon Wells 1-87 to 4-87				$10,000							3
10 Drill & equip 2nd Keystone Hill Well				$90,000							3
11 Drill & equip 3rd Ft. Casey Well				$80,000							2
12 Storage building at Ft. Casey			{c}	$25,000		1					
B Treatment											
1 Expand plant capacity to 400 gpm				$100,000							2
2 Install In-Town treatment				$150,000							3
C Storage and pumping											
1 Pennington Hill booster pump				$50,000	1						
2 Ft. Casey standby booster pump			{e}	$20,000							2
3 Parker Road in-line booster pump			{e}	$60,000							2
4 Earthquake valve Sunset Terrace Tank 1				$40,000	1						
5 Earthquake valve Sunset Terrace Tank 2				$40,000							2
6 Abandon Engle Road Reservoir				$50,000							3
D Telemetry											
1 Replace existing telemetry system			{c}	$80,000	1						

WATER SYSTEM SIX-YEAR CAPITAL PLAN (continued)

Priorities: 1 - High; 2 - Moderate; 3 - Low			ESTIMATED COST (2008 $)	CONSTRUCTION SCHEDULE Six-Year Plan 2009	2010	2011	2012	2013	2014	20-Year Plan 2015 to 2029
II NEW WATER MAINS										
A In-Town										
1 Pennington pumped zone (Phase 1)	300 ft	4"	$18,000	1						
2 Pennington pumped zone (Phase 2)	1,100 ft	4"	$66,000							2
3 Pennington pumped zone (Phase 3)	650 ft	4"	$39,000							3
4 Reservoir-Parker Road Loop	6,810 ft	8" {e}	$511,000							3
B Out-of-Town										
1 Ft. Casey Road (system loop)	7,200 ft	8"	$540,000							3
III WATER MAIN REPLACEMENT										
A In-Town										
1 Madrona Way (Phase 1)	1,240 ft	8" {d}	$93,000	1						
2 Fourth Street, Main to Kinney	2,385 ft	6"	$43,000	1		{balance of project started in 2008}				
3 Faris Street / Pennington Loop	870 ft	8"	$65,000							2
4 Perkins / Sixth Streets	1,790 ft	8"	$134,000							2
B Out-of-Town										
1 Terry Road/ Ft. Casey Road	6,540 ft	8"	$491,000							3
2 Madrona Way (Phase 2) replace 4"	1,620 ft	8"	$121,000							2
3 Madrona Way (Phase 3) replace 4"	7,010 ft	8"	$426,000							3
4 Madrona Way (Phase 4) replace 2"	1,350 ft	4"	$81,000							3
5 Engle Road / SR 20 (to Ferry)	5,160 ft	8" {e}	$387,000							3
6 SR 20 (Ferry to parking lot)	900 ft	6"	$54,000							3

WATER SYSTEM SIX-YEAR CAPITAL PLAN (continued)

IV	**MISCELLANEOUS**							
A	Air release valves							
1	Assumes 10 new installations at $1,000 each	$10,000		1				
2	Assumes 5 replacements at $800 each	$4,000					1	
B	Water meters							
1	Source meter testing and repairs/replacement	$12,000	1	1	1	1	1	1
2	Large meter testing and repairs/replacement	$12,000	1	1	1	1	1	1
3	Small meter replacement	$24,000	1	1	1	1	1	1
	TOTAL	**$4,603,000**						

V	**UNALLOCATED**		
A	Emergency Reserve	$50,000	
B	Capital Reserve	$200,000	
C	Available Capital for Allocation Includes $54,000 set aside for storage building at Ft. Casey WTP	$529,671	
	Total	$779,671	

NOTES

{a} Projects not funded by grant, therefore delayed until after 2015
{b} Well rehabilitation is scheduled for every 3 to 4 years.
{c} Project is combined with sewer capital program, project cost assessed 50% to water fund.
{d} Project is coordinated with sewer capital program
{e} Project may be required before scheduled date to provide added source capacity or system capacity for developments; cost or partial cost may be assessed to customers.
{f} Work previously funded in maintenance budget, but is shown in Capital Budget for project management.

* Inflation and contingency allowance are not include in the above budget costs. 3% inflation included in 6-year budget (pages 4 to 6)

WATER SYSTEM SIX-YEAR CAPITAL PLAN

	Annual Budget (2009 Dollars + 3% inflation)					
	2009	2010	2011	2012	2013	2014
I FACILITIES						
A Wells						
1 Purchase of well easement	$0	$51,500	$0	$0	$0	$0
2 Ft. Casey emergency generator, 140 KW	$0	$0	$0	$54,636	$0	$0
3 Keystone Hill raw water line (loan)	$425,000	$0	$0	$0	$0	$0
4 Equip Well 1-08 (loan)	$82,000	$0	$0	$0	$0	$0
5 Abandon Well No. 1	$0	$0	$0	$0	$0	$0
6 Rehabilitate Wells 4 & 7	$0	$0	$0	$41,524	$0	$0
7 Rehabilitate Wells 1-90 & 1-06	$38,000	$0	$0	$0	$42,769	$0
8 Abandon Cistern & Infil. Gallery	$0	$0	$0	$0	$0	$0
9 Abandon Wells 1-87 to 4-87	$0	$0	$0	$0	$0	$0
10 Drill & equip 2nd Keystone Hill Well	$0	$0	$0	$0	$0	$0
11 Drill & equip 3rd Ft. Casey Well	$0	$0	$0	$0	$0	$0
12 Storage building at Ft. Casey	$0	$25,750	$0	$0	$0	$0
B Treatment						
1 Expand plant capacity to 400 gpm	$0	$0	$0	$0	$0	$0
2 Install In-Town treatment	$0	$0	$0	$0	$0	$0
C Storage and pumping						
1 Pennington Hill booster pump	$50,000	$0	$0	$0	$0	$0
2 Ft. Casey standby booster pump	$0	$0	$0	$0	$0	$0
3 Parker Road in-line booster pump	$0	$0	$0	$0	$0	$0
4 Earthquake valve Sunset Terrace Tank 1	$40,000	$0	$0	$0	$0	$0
5 Earthquake valve Sunset Terrace Tank 2	$0	$0	$0	$0	$0	$0
6 Abandon Engle Road Reservoir	$0	$0	$0	$0	$0	$0
D Telemetry						
1 Replace existing telemetry system	$80,000	$0	$0	$0	$0	$0

WATER SYSTEM SIX-YEAR CAPITAL PLAN (continued)

	Annual Budget (2009 Dollars + 3% inflation)					
	2009	2010	2011	2012	2013	2014
II NEW WATER MAINS						
A In-Town						
1 Pennington pumped zone (Phase 1)	$18,000	$0	$0	$0	$0	$0
2 Pennington pumped zone (Phase 2)	$0	$0	$0	$0	$0	$0
3 Pennington pumped zone (Phase 3)	$0	$0	$0	$0	$0	$0
4 Reservoir-Parker Road Loop	$0	$0	$0	$0	$0	$0
B Out-of-Town						
1 Ft. Casey Road (system loop)	$0	$0	$0	$0	$0	$0
III WATER MAIN REPLACEMENT						
A In-Town						
1 Madrona Way (Phase 1)	$93,000	$0	$0	$0	$0	$0
2 Fourth Street, Main to Kinney	$43,000	$0	$0	$0	$0	$0
3 Faris Street / Pennington Loop	$0	$0	$0	$0	$0	$0
4 Perkins / Sixth Streets	$0	$0	$0	$0	$0	$0
B Out-of-Town						
1 Terry Road/ Ft. Casey Road	$0	$0	$0	$0	$0	$0
2 Madrona Way (Phase 2) replace 4"	$0	$0	$0	$0	$0	$0
3 Madrona Way (Phase 3) replace 4"	$0	$0	$0	$0	$0	$0
4 Madrona Way (Phase 4) replace 2"	$0	$0	$0	$0	$0	$0
5 Engle Road / SR 20 (to Ferry)	$0	$0	$0	$0	$0	$0
6 SR 20 (Ferry to parking lot)	$0	$0	$0	$0	$0	$0
IV MISCELLANEOUS						
A Air release valves						
1 Assumes 10 new at $1,000 each	$0	$10,300	$0	$0	$0	$0
2 Assumes 5 replacements at $800 each	$0	$0	$0	$0	$4,502	$0

WATER SYSTEM SIX-YEAR CAPITAL PLAN (continued)

		Annual Budget (2009 Dollars + 3% inflation)					
		2009	2010	2011	2012	2013	2014
B	Water meters						
1	Source meters, test & repair/replace	$2,000	$2,060	$2,122	$2,185	$2,251	$2,319
2	Large meters, test & repair/replace	$2,000	$2,060	$2,122	$2,185	$2,251	$2,319
3	Small meter replacement	$4,000	$4,120	$4,244	$4,371	$4,502	$4,637
V	**UNALLOCATED**						
A	Emergency Reserve $50,000						
B	Capital Reserve $200,000						
	TOTAL EXPENDITURE	**$877,000**	**$95,790**	**$8,487**	**$104,902**	**$56,275**	**$9,274**
	PORTION FINANCED BY LOANS	**-$507,000**					
	NET FUNDS REQUIRED	**$370,000**	**$95,790**	**$8,487**	**$104,902**	**$56,275**	**$9,274**
VI	**AVAILABLE CAPITAL IMPROVEMENT FUNDS**						
A	Beginning of Year Balance	$529,671	$158,138	$79,056	$87,523	-$170	$14,226
B	Transferred Surplus (Revenue - Expenditures) from Operations Budget	$20,000	$20,000	$20,000	$20,000	$20,000	$20,000
C	Transferred Operations Budget Items IV-B)	$8,000	$8,240	$8,487	$8,742	$9,004	$9,274
D	Added Hook-up Fees (assumes none in 2009)	$0	$18,000	$18,000	$18,000	$18,000	$18,000
E	Added Debt Payment (i = 1.5%, 20 YRS) CRF-1.5%-20 = 0.05825	-$29,533	-$29,533	-$29,533	-$29,533	-$29,533	-$29,533
F	Retired debt	$0	$0	$0	$0	$53,200	$53,200
	AVAILABLE CAPITAL IMPROVEMENT FUNDS	**$528,138**	**$174,846**	**$96,010**	**$104,732**	**$70,501**	**$85,167**

Bratton {3/27/2009}

Appendix X

Town Code – Chapter 13.08
(Service Policies and Water Rates)

TOWN OF COUPEVILLE
Coupeville, Washington

ORDINANCE NO. 658

AN ORDINANCE of the Town Council of the Town of Coupeville, repealing Coupeville Town Code Section 13.08.080, provisions for new water hook-up rights in the out-of-town service area; and redrawing the water service area boundary.

WHEREAS, in 1994, due to concerns about the capacity of the Town of Coupeville water system and its existing wells, the Town Council adopted Ordinance No. 492 establishing a temporary ninety-day moratorium on the issuance of new water connections permits to the Town water system; which moratorium was extended for various additional periods by Ordinance Nos. 494, 498, 503 and 516;

WHEREAS, in 2002, due in part to continuing concerns regarding water system capacity, the Town Council adopted Ordinance 626 amending Coupeville Town Code (CTC) chapters 13.04 and 13.08 with respect to the provision of water services;

WHEREAS, Coupeville Town Code section 13.08.080 prohibits the sale of new water hook-up rights to customers in the out-of-town portion of the Town's water service area, except to honor valid contractual commitments;

WHEREAS, the Town has recently completed an investigation of the capacity of local aquifers to supply its current and future potable water needs, including evaluation of the potential yields of additional well field areas adjacent to the Town's water system and re-evaluation of sea-water intrusion issues;

WHEREAS, the Island County Watershed Resource Management Plan supports the provision of water services by public utilities rather than individual wells for several reasons including the prevention of seawater intrusion to local aquifers, which impacts the ground water quality for both public and private water systems to the detriment of the public health, safety and welfare;

WHEREAS, it is in the interest of the public health, safety and welfare to revise the boundaries of the Town's water service area so that the Town can provide water service to an appropriately sized out-of town service area in order to protect the ground

water quality in that area from degradation due to seawater intrusion from a proliferation of exempt wells, if that change can be made without impacting the capacity of the Town water system to serve growth within the Town limits; and

WHEREAS, the Town Council held public meetings on March 28, 2006 and April 11, 2006 and took public comments concerning the proposed amendments to the water service area and provision of new water hookup rights to properties in the out-of-town service area.

NOW THEREFORE, BE IT ORDAINED by the Town Council of the Town of Coupeville as follows:

Section 1. The Town shall request that the map identified as Attachment A to this ordinance and entitled "Water Distribution System Service Area Map" be approved by Island County and the Washington State Health Department as the Water Service Area Boundary for the Town of Coupeville, and shall amend or supplement its water system comprehensive plan as necessary to accomplish this purpose.

Section 2. Coupeville Town Code Section 13.08.080 is repealed.

This Ordinance shall become effective immediately upon passage and publication as required by law.

PASSED by the Town Council and **APPROVED** by its Mayor this 11th day of April, 2006.

Nancy Conard, Mayor

APPROVED AS TO FORM:

Dale K. Roundy, Town Attorney

ATTEST:

Judy A. Thomas, Clerk-Treasurer

Approved: April 11, 2006
Published: April 14, 2006
Effective Date: April 19, 2006

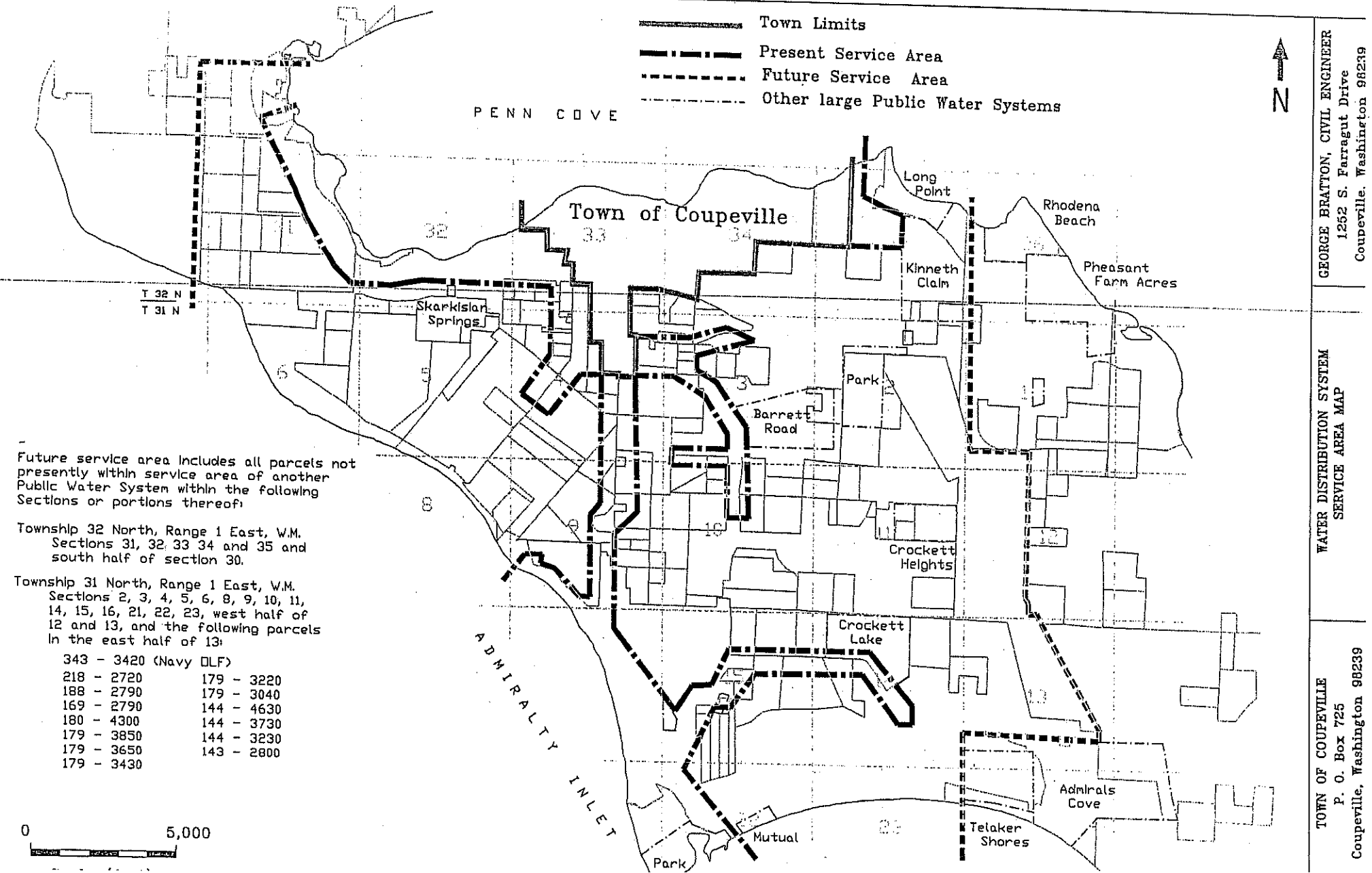

Future service area includes all parcels not presently within service area of another Public Water System within the following Sections or portions thereof:

Township 32 North, Range 1 East, W.M.
Sections 31, 32, 33, 34 and 35 and south half of section 30.

Township 31 North, Range 1 East, W.M.
Sections 2, 3, 4, 5, 6, 8, 9, 10, 11, 14, 15, 16, 21, 22, 23, west half of 12 and 13, and the following parcels in the east half of 13:

343 - 3420 (Navy DLF)

218 - 2720	179 - 3220
188 - 2790	179 - 3040
169 - 2790	144 - 4630
180 - 4300	144 - 3730
179 - 3850	144 - 3230
179 - 3650	143 - 2800
179 - 3430	

WATER DISTRIBUTION SYSTEM
SERVICE AREA MAP

TOWN OF COUPEVILLE
P. O. Box 725
Coupeville, Washington 98239

GEORGE BRATTON, CIVIL ENGINEER
1252 S. Farragut Drive
Coupeville, Washington 98239

TOWN OF COUPEVILLE
Coupeville, Washington

ORDINANCE NO. 659

AN ORDINANCE of the Town Council of the Town of Coupeville, repealing the Coupeville Town Code Section 13.08.070(D) to allow the purchase of in-town water hook-up rights without a building permit application.

WHEREAS, the Town has recently completed an investigation of the capacity of local aquifers to supply its current and future potable water needs, including evaluation of the potential yields of additional well field areas adjacent to the Town's water system and re-evaluation of sea-water intrusion issues;

WHEREAS, the Town Council, on advice of its consulting engineer, has determined that there is adequate capacity in its water system to provide for additional in-town and out-of-town water hook-ups;

WHEREAS, in accordance with Coupeville Town Code Section 13.08.070 water hook-ups are sold on a first-come, first-served basis, and new connections are permitted only in conjunction with an application for a permanent full structure building permit;

WHEREAS, owners and developers of property in the in-town portion of the Town's water service area have requested the ability to purchase a water hook-up right from the Town without the necessity of an application for a permanent full structure building permit; and

WHEREAS, the Town Council held public meetings on March 28, 2006 and April 11, 2006 and took public comments concerning this proposal.

NOW, THEREFORE, BE IT ORDAINED by the Town Council of the Town of Coupeville as follows:

Section 1. Coupeville Town Code Section 13.08.070(D), a prohibition on the issuance of new water hook-up rights unless they are issued in conjunction with an application for building permit, is repealed. The repeal of Section 13.08.070(D) is not intended to alter or affect the operation of Coupeville Town Code Section 13.08.080, the existing

requirement that new water hook-up rights for out-of-town customers only be issued in conjunction with an application for building permit.

This Ordinance shall become effective immediately upon passage and publication as required by law.

PASSED by the Town Council and **APPROVED** by its Mayor this 11th day of April, 2006.

Nancy Conard, Mayor

APPROVED AS TO FORM:

Dale K. Roundy, Town Attorney

ATTEST:

Judy A. Thomas, Clerk-Treasurer

Approved: April 11, 2006
Published: April 14, 2006
Effective Date: April 19, 2006

Title 13

PUBLIC SERVICES

Chapters:

Division I. Water and Sewer Service

13.04 General Provisions

13.08 Water Service System

13.12 Sewer Service System

13.16 Water and Sewer Bills

Division II. Stormwater Management

13.20 Stormwater Management Regulations

Chapter 13.04

GENERAL PROVISIONS*

Sections:

13.04.010 Purpose and intent.
13.04.020 Definitions.
13.04.030 Dormant services.
13.04.040 Water/sewer reserve funds.
13.04.050 Waiver of miscellaneous fees and charges.
13.04.060 Nonliability of enforcement agent.
13.04.070 Violation—Penalty.

* Prior ordinance history: Ord. 526.

13.04.010 Purpose and intent.

A. It is the intent of this division to provide for and promote the health, safety and welfare of the general public, and not to create or otherwise establish or designate any particular class or group of persons who will or should be especially protected or benefited by the terms of the requirement contained herein.

B. It is the specific intent of this division to place the obligation of complying with its requirements upon the property owner and applicants and no provision or term used herein is intended to impose any obligation whatsoever upon the Town or any of its officers, employees, or agents arising from the property owner and applicants failure to comply.

C. Nothing contained in this division is intended to be nor shall be construed to create or form the basis for any liability on the part of the Town, its officers, employees or agents, for any injury or damages resulting from the failure to comply with this division, or by reason or in consequence of any inspection, notice, order, certificate, permission or approval authorized or issued or done in connection with the implementation or enforcement of this division, or by reason of any action or inaction on the part of the Town related in any manner to the enforcement of this division by its officers, employees or agents. (Ord. 626 § 2 Att. A (part), 2002)

13.04.020 Definitions.

As used in this division:

"Cross connection" means any actual or potential physical connection between a potable water line and any pipe, vessel, or machine containing a non-potable fluid or has the possibility of containing a nonpotable fluid, such that it is possible for the non-potable fluid to enter the water system by backflow; bypass arrangements, jumper connections, removable sections, swivel or change-over devices, and other temporary, permanent or potential connections through which, or because of which, backflow could occur, are considered to be cross connections.

"Customer" means the current owner of the parcel of land to which the water connection permit or sewer connection permit applies.

"Emergency conditions" means any operating conditions under which there is a failure of one or more components of the water system (i.e., wells, treatment, storage or distribution), or where there is an extraordinary demand to supply water for fire protection.

"Excess pollutant discharge" means matter of any nature discharged into the sewer system, which discharge might reasonably be considered a violation of this division.

"Equivalent single-family residential unit (ERU)" means the amount of water assumed in the water system design for the maximum day demand (MDD). The quantity of water for one ERU shall be the amount established in the Town's Water System Plan approved by the Washington Department of Health.

"Fire services" means any water service connection used exclusively for fire protection purposes, such as to supply a fire hydrant or fire sprinkler system.

"Interruptible service connection" means any industrial or agricultural service connection where water supply may be interrupted by the Town during specified nonemergency conditions.

"Nonemergency conditions" means the inability of the Town, under normal operating conditions, to meet peak day demand.

"Normal operating conditions" means when the Town is producing water at full capacity from all Washington Department of Health approved sources of supply.

"Out-of-town water right" means the right obtained by a limited number of persons through contractual agreement or memorandum of understanding with the Town to purchase an out-of-town water hookup right, subject to compliance with all other requirements for obtaining a water connection, including the payment of hook-up right, permit and related fees.

"Residential customer" means a customer who is supplied water for single-family or multi-family use only.

"Sewer connection permit" means a permit issued by the Town after the customer's completion of the appropriate application and payment of the applicable fees, which authorizes the installation of the sewer service connection under the terms and conditions established in this chapter.

"Sewer hook-up right" means the right to obtain a connection to the sewer system under the terms and conditions established in this chapter.

"Sewer lateral" means the customer owned and maintained pipe, fittings and appurtenances installed to convey sewage under gravity flow and/or pressure from the customer's premises to the town's sanitary sewer connection.

"Sewer rate" means the monthly assessment for the volume of sanitary sewage discharged into the sewer system, as measured in units of cubic feet.

Sewer service and reserve capacity charge" means the monthly assessment made by the Town to defray a portion of the cost of billing and collection, and the cost to maintain the sewer collection system and wastewater treatment plant in order to provide sewer service, exclusive of the cost to collect and treat a given quantity of sewage.

"Sewer service connection" means the physical installation of the tap to the sanitary sewer located in the town right-of-way, and excludes the customer's lateral pipe, fittings and appurtenances connecting the sanitary sewer to the premises.

"Sewer system" means all sanitary sewage collection piping, pumping facilities, treatment facilities and appurtenances owned by the Town inside the town limits.

"Town" means the Town of Coupeville.

"Water connection permit" means a permit issued by the Town after the customer's completion of the appropriate application and payment of the applicable fees, which authorizes the installation of the water service connection under the terms and conditions established in this chapter

"Water hook-up right" means the right to obtain a service connection to the water system under the terms and conditions established in this chapter.

"Water rate" means the monthly assessment for the volume of water used by the customer, as measured in units of cubic feet.

"Water service and reserve capacity charge" means the monthly assessment made by the Town to defray a portion of the cost of billing and collection, and/or the cost to maintain the water distribution system in order to provide water service, exclusive of the cost to supply a given quantity of water.

"Water service connection" means the physical installation of the tap, fittings, pipe and other necessary appurtenances required to deliver water from the water main up to and including the meter setter and/or meter.

"Water system" means all water source and supply facilities, storage facilities, transmission and distribution mains, pumping plants, services and appurtenances owned by the Town both inside and outside of the town limits. (Ord. 626 § 2 Att. A (part), 2002)

13.04.030 Dormant services.

A. Removal of Dormant Service Connections.

1. Any water service connection or sewer lateral that is unused or abandoned for more than six months shall be deemed by the Town to be dormant and may be removed from the water main or sewer, respectively. The failure of the customer to pay in full the monthly water or sewer fees and charges for more than six months establishes that the water service or sewer lateral is unused or abandoned. All water service or sewer lateral not registered with the Town by

a duly executed water connection permit or sewer connection permit, or alternatively, without being recorded in the town's billing journal for the purpose of assessing monthly fees and charges, are considered to be dormant.

2. If a service connection is subsequently desired for a property previously supplied by a dormant service, the owner of the property or his/her authorized agent shall make application and pay for a new service connection in the manner prescribed in this division, and without any credit whatsoever for the dormant service. (Ord. 526 Part E § 1, 1996)

B. Forfeit of Water and Sewer Hook-up Right.

1. Where a customer fails to pay in full the monthly fees and charges for a water hook-up right or a sewer hook-up right for a period of more than six months, the hook-up right shall be forfeited, and any certificate issued therefore shall be void. The Town shall make no refund of the water or sewer hook-up fees paid by the customer nor shall the Town make any guarantee that a water and/or sewer hook-up right will be available when requested by the customer. (Ord. 626 § 2 Att. A (part), 2002)

13.04.040 Water/sewer reserve funds.

A. Reserve Funds.

1. Water hook-up fees shall be deposited directly into the cumulative reserve for the water fund for capital costs.

2. Sewer hook-up fees shall be deposited directly into the cumulative reserve for the sewer fund for capital costs.

B. Consolidation of the Sewer and Water Systems.

1. The town's system of sewage and water shall be consolidated into a single utility department to be known as the "water and sewer department."

2. That funds collected under this division shall be credited to the common accounts of the water and sewer department. (Ord. 626 § 2 Att. A (part), 2002)

13.04.050 Waiver of miscellaneous fees and charges.

The mayor may waive any fees or charges imposed under this division that have occurred due to town administrative delays, misunderstandings, or similar circumstances where said fees and charges would be inappropriate. (Ord. 626 § 2 Att. A (part), 2002)

13.04.060 Nonliability of enforcement agent.

No official, employee or agent charged with the enforcement of this division, acting for the Town in good faith and without malice in the discharge of his/her duties shall thereby render himself/herself liable personally for any damages which may accrue to persons or property as a result of any act required or by reason of any act or omission in the discharge of such duties. (Ord. 626 § 2 Att. A (part), 2002)

13.04.070 Violation—Penalty.

Where, in the opinion of the town council, a violation of this division constitutes a hazard to the public health and safety, such violation shall constitute a nuisance for which the Town may seek injunctive relief or abatement in a court of competent jurisdiction. Any person violating any of the provisions or failing to comply with any of the mandatory requirements of this division shall upon conviction of such violation or failure be punished by a fine of not more than one thousand dollars ($1,000.00). Penalty or enforcement provisions in this division shall not be exclusive. (Ord. 626 § 2 Att. A (part), 2002)

Chapter 13.08

WATER SERVICE SYSTEM*

Sections:

13.08.010 Water rates.
13.08.020 Water hook-up right fees.
13.08.030 Meter requirements and sizes.
13.08.040 Cost, location and ownership of meters and services.
13.08.050 Cost of extension of water service inside and outside of the Town.
13.08.060 Transfer of in-town water hook-up rights and out-of-town water rights and water hook-up rights.
13.08.070 Application for water service.
13.08.090 Out-of-town water hook-up right definition.
13.08.100 Voluntary termination of water hook-up rights, water connections or water connection permits.
13.08.110 Water management—Land subdivision and private water wells.
13.08.120 Water conservation.
13.08.130 Interruptable water supply.
13.08.140 Water system maintenance.
13.08.150 After hour and weekend call-ins—Per hour rate.
13.08.160 Standards of construction.

* Prior ordinance history: Ords. 614 and 526.

13.08.010 Water rates.

A. All customers who are either connected to the town's water system, have a water hookup right, or have a water connection permit shall pay the applicable following water rate and service and reserve capacity charges.

B. Rates. The monthly rate per cubic foot for water supplied by the municipal water system of the Town shall be as follows:

	In-Town Customer	Out-of-Town Customer
October through May	$0.0275	$0.0412
June through September	0.0412	0.0618

C. There shall be a monthly service and reserve capacity charge based on the size of the water meter. These charges are as follows:

Meter Size	In-Town Customer	Out-of-Town Customer
3/4—5/8 inch	$ 13.33	$ 20.00
1 inch	22.66	34.00
1.5 inch	44.00	66.01
2 inch	70.65	106.00
3 inch	142.64	214.01
4 inch	222.63	334.03
6 inch	444.34	666.52

D. Fire Services. The service and reserve capacity charge for fire services (fire hydrants or fire sprinkler systems on private property) shall be based on the number of three-fourths-inch detector meters on backflow prevention assemblies that are either installed, or required to be installed, by the Town as outlined in Section 13.08.140 of this chapter.

E. The service and reserve capacity charges apply to any authorized connection or water hookup right, and are not based on installation of a water meter or consumption of water. The charges shall commence on: (1) June 13, 1994 (date of adoption of repealed Ordinance 489) for any authorized connections or water hookup rights existing on that date or (2) on the date of issuance of any connection permit issued after June 13, 1994. (Ord. 626 § 3 Att. B (part), 2002)

13.08.020 Water hook-up right fees.

A. Water Hook-Up Right Fees. Prospective and existing customers of the Coupeville municipal water system shall pay the Town the hook-up fees as listed

below prior to the installation of meters by the Town and prior to the commencement of initial water service or the expansion of existing water service. These fees for a new or increased water hook-up right are for the pro rata share of the cost of the existing water system plus the cost of the capital improvements attributable to increased system capacity to allow the additional hook-up right. Hook-up right fees shall be based on the town's assessment of the customer's water demand in terms of equivalent single-family residential unit (ERU). One ERU is the amount of water assumed in the water system design for the maximum day demand (MDD). The quantity of water for one ERU shall be the amount established in the town's water system plan approved by the Washington Department of Health.

The minimum assessed water MDD per customer is 1 ERU. For multi-family and mixed use premises, the number of ERUs assessed to a customer shall be rounded upward to the nearest 1/2 ERU.

Customer Classification	Water Hook-up Right Fee
In-Town Customer	$ 4,500.00 per ERU
Out-of-Town Customer	$ 9,000.00 per ERU

The Town shall reassess a customer's water demand for a change of property use or expansion of premises. The owner or contract purchaser of property with a change in occupancy or application for building permit shall pay any additional hook-up right fee assessed for expansion of service. The Town shall not give a refund for a reduction in service.

B. A separate fire service pipe equipped with a "detector meter" for automatic fire sprinklers and/or on-site hydrants shall be exempt from the above hook-up right fees.

C. Prospective customers shall, at the time of application for service, specify the type and scale of use proposed for the service. Town approval of a hook-up shall be contingent upon the hook-up serving the use specified at the time of application. During the duration of the service, the Town shall have the authority to disapprove changes in use of a service or apply restrictions or conditions to approval of a change of use necessary for proper system operation and protection of public health.

D. The property to which any water hookup or hookup right pertains, including hookup rights existing on the date of the ordinance codified in this chapter, shall be identified by the property owner in a manner satisfactory to the Town by a single street address, or a single lot number and plat description, or a single Island County tax parcel number. (Ord. 626 § 3 Att. B (part), 2002)

13.08.030 Meter requirements and sizes.

A. Requirements for Meters.

1. No person shall obtain or attempt to obtain water from the Coupeville municipal water system except through a water meter duly registered in the office of the town clerk-treasurer, provided, that this requirement shall not apply to water used for fire fighting by authorized fire fighting personnel, emergencies and public purposes specifically authorized by the town council.

2. A separate water meter shall be installed and used for each single-family residence, together with its ancillary structures, such as garages and outbuildings.

3. A single water meter shall be installed and used for each non-single-family customer except that upon request of the owner or contract purchaser of such properties and subject to the approval of the Town, more than one meter may be installed and used. Additional meters for the convenience of the customer to distribute costs to tenants or similar purposes will not be allowed.

B. Sizes and Types of Meters.

1. Meter sizes shall conform to those prescribed by the American Water Works Association in the most current edition of "Sizing Water Service Mains & Meters" (AWWA M22), as published from time to time, with any interpretations of those standards to be made by the Town. Regardless of type or use of service size, the Town has the authority to modify the size of the meter throughout the duration of a service. The meter shall be sized based on considerations of volume and rate of water use, fire safety, existing equipment requirements and other relevant criteria.

2. All meters sized two inches or larger shall be compound meters unless otherwise specified by the Town. (Ord. 626 § 3 Att. B (part), 2002)

13.08.040 Cost, location and ownership of meters and services.

A. All water services installed after May 8, 1995 (date of adoption of repealed Ordinance 499), from the main to and including the meter setting (consisting of meter, meter setter, meter check valve and meter box), shall be installed within the right-of-way of town street or utility easement, and shall remain the property of, and shall be maintained and operated by, the Town. For any water service existing on or before May 8, 1995, which service includes a water meter located solely within the customer's property and outside of any town right-of-way or utility easement, the Town shall be responsible only for the maintenance and operation of the service pipe located within the town right-of-way or utility easement, and the water meter. The customer shall be solely responsible for the maintenance and operation of all utilities, excluding the water meter, located within the customer's property.

The above requirements shall also apply to out-of-town customers, except that the installation location shall be considered the right-of-way of the Island County road containing the town's water distribution main.

B. The actual cost of the installation or enlargement of water services and/or meter settings shall be paid by the person requesting the installation or whose actions require the enlargement of the same.

C. The Town or contractor employed by the Town shall install the water service and water meter. The actual installation costs incurred by the Town (comprising of all material, labor and fringe benefit, and equipment rental costs), plus state sales tax and a ten (10) percent administration overhead charge, shall be billed to the customer.

D. Notwithstanding subsection C, above, the Town may allow the customer to install the water service and meter setting (excluding the meter), provided the customer pays a one hundred dollar ($100.00) inspection fee; employs a contractor pre-approved by the Town; and agrees to pay all costs (comprising of all material, labor and fringe benefit, and equipment rental costs), plus state sales tax and a ten (10) percent administration overhead charge, for the Town to repair or correct any defect found by the Town within one year of service and/or meter setting installation as a charge under Chapter 13.16.

E. Notwithstanding the aforementioned, water meters on the bypass of a detector check valve, double check detector assembly (backflow preventer) or reduced pressure detector assembly (backflow preventer) or other meters that are not used for billing purposes but to indicate the unauthorized use of water from fire lines, shall be owned and maintained by the Town; the associated check valve or backflow prevention assembly and its appurtenances shall be installed, owned and maintained by the customer. (Ord. 626 § 3 Att. B (part), 2002)

13.08.050 Cost of extension of water service inside and outside of the Town.

A. The entire cost of the extension of the water system and the upgrading of existing facilities to permit the extension of the system, including both labor and materials, shall be paid by the water user or users to be served by the extension, and all materials installed in such extension from the point of the town's water mains up to and including the individual meter or meters shall be the property of the Town.

Notwithstanding the aforesaid, where existing facilities must be upgraded to permit the extension of the system, the Town may enter into a cost sharing agreement and/or latecomer agreement for the portion of the project cost that is attributable to the required upgrading of the system. The town's share of the cost shall not exceed seventy-five (75) percent of the total value of the project, and the latecomer agreement shall be for a period not to exceed fifteen (15) years. The town's share of the cost of a project may be made in the form of a credit for one or more water hook-up fees for water connections to lots supplied by the water main extension.

B. The Town shall authorize no extension of the water system until the town council has approved the

proposed method for the payment of the extension of the water service. (Ord. 626 § 3 Att. B (part), 2002)

13.08.060 Transfer of in-town water hook-up rights and out-of-town water rights and water hook-up rights.

A. Water hook-up rights eligible for transfer, obtained prior to May 3, 2002, may be transferred from one specific property to another specific property only in accordance with the provisions of this section. Water hookup rights shall run with the property unless transferred in accordance with the provisions of this chapter. Connections and hook-up rights obtained pursuant to Section 13.08.110 are not eligible for transfer.

B. A water hook-up right shall not be transferable to any water line location where the connection would adversely impact the health, safety, or welfare of existing water users or where the water connection itself would not meet State Health Department requirements. The Town staff shall certify the suitability of each request for a water hook-up right transfer and the Town shall deny any transfers that are not compliant with health department requirements or water distribution standards.

C. Any application requesting transfer of a water hook-up right shall be made only pursuant to forms provided by the Town. The transfer application documents shall be signed by both the transferor and the transferee, before a notary, and the application shall describe each of the real properties from and to which the water service will be transferred, including the legal description, tax parcel number and street address, if any, of each of the properties. The application forms shall require the full legal name and mailing address of the transferee.

D. A fee of one hundred dollars ($100.00) shall be charged by the Town and paid in advance for the review, validation and recording of the transfer. For the transfer of an existing service connection to another property or location on an existing property, the Town shall disconnect the old service pipe from the water main. The actual disconnection costs incurred by the Town (comprising of all material, labor and fringe benefits, and equipment rental costs), plus state sales tax and a ten (10) percent administration overhead charge, shall be billed to the transferee (new customer).

F. For each water hook-up right obtained prior to May 3, 2002, that is transferable but not presently connected, the Town will issue a notarized numbered certificate of transferable water hook-up right. The water hook-up right shall be for an equivalent single-family residential unit (ERU). Once this water hook-up right is connected, it will be treated in accordance with Section 13.08.060(A).

G. Where the water demand on a property is reduced by a change of property use, a transferable water hook-up right shall not be created.

H. A transferrable water hook-up right is for an equivalent single-family residential unit (ERU). Upon application for a water connection permit, the water use of the property will be assessed. Where the water usage is estimated by the Town to be greater than one ERU, additional water hook-up rights shall be purchased prior to the issuance of the water connection permit. The fee for the additional water hook-up rights shall be the prevailing rate at the time of application for a water connection permit. The transfer of a water hook-up right without an associated water connection permit shall not commit the Town to the sale of additional water hook-up rights at the original location; such sales are subject to the adequacy of water supply.

I. In-town water hook-up rights are only transferable among in-Town property locations. (Ord. 626 § 3 Att. B (part), 2002)

13.08.070 Application for water service.

A. Before water is furnished to any premises, an application form to establish water service (water connection permit), provided by the Town, shall be completed and signed and the appropriate water service connection charge paid pursuant to this chapter. Each application shall be made by the owner of the property to be served or by his/her authorized agent. As a condition of establishing water service, the owner of the property to receive water service, and the owner's successors and assigns, shall be obligated to comply with all of the provisions of this

chapter and any subsequent amendment thereto and all other applicable laws and regulations existing on the date of the ordinance codified in this chapter or adopted from time to time hereafter.

B. Upon a change of ownership of a premise currently obtaining water service, an application form to continue water service (revised water connection permit), provided by the Town, shall be completed and signed and the appropriate charges paid pursuant to this chapter. Each application shall be made by the owner of the property to be served or by his/her authorized agent. As a condition of establishing water service, the owner of the property to receive water service, and the owner's successors and assigns shall be obligated to comply with all of the provisions of this chapter and any subsequent amendment thereto and all other applicable laws and regulations existing on the date of the ordinance codified in this chapter or adopted from time to time hereafter.

C. Water hook-up rights shall be sold on a first-come first-served basis as long as water supplies are adequate.

E. Should a building permit expire, the water hook-up right issued in conjunction with the building permit shall expire. In this event, the Town shall the water hook-up fee collected in conjunction with the building permit. An amount equal to the actual cost (comprising of all material, labor and fringe benefit, and equipment rental costs, plus state sales tax and a ten (10) percent administration overhead charge) incurred by the Town to remove any service pipe installed under the water connection permit shall be deducted from refund.

F. A new water connection permit shall be issued with respect to an authorized out-of-town water hook-up right only in conjunction with an application for a permanent full structure building permit that requires water service and that is filed in accordance with all applicable procedures of Island County. The issuance of a water connection permit pursuant to this subsection shall be made subject to the customer providing proof, acceptable to the Town, that the applicant has satisfied all requirements imposed by Island County for a valid building permit application. Should the building permit upon which the customer bases its application for an out-of-town water connection permit expire, or be denied by Island County, the out-of-town water connection permit shall immediately expire. In such event, and upon written request to the Town, the Town shall refund to the customer the fee initially collected from the customer in conjunction with the expired water connection permit.

G. As a condition for the issuance of a water connection permit after March 26, 2002, the Town may require an easement on the property served in which to locate utility equipment that is needed to serve the property and for which there is not sufficient room in the Town right-of-way to place the equipment without excessive utility congestion. Such easements shall extend no further than ten (10) feet into the applicant's property from the Town right-of-way and no further along the width of the property than the minimum necessary to place and maintain the equipment. The form of the easement agreement shall be acceptable to the Town and recorded with the county auditor. This condition of service does not preclude the Town requiring other easements as a condition to the issuance of a building permit or other approval of use, subdivision or combination of the property served. (Ord. 659 § 1, 2006; Ord. 626 § 3 Att. B (part), 2002)

13.08.090 Out-of-town water hook-up right definition.

A. "Out-of-town water hook-up right" is defined and limited to the right to receive and consume the amount of water that would reasonably be consumed by a single-family residence. An out-of-town right is only a right and does not exempt the owner from the fees required by this chapter for a water connection.

B. The property to which any water hookup or hookup right pertains, including hookup rights existing on the date of the ordinance codified in this chapter, shall be identified by the property owner in a manner satisfactory to the town by a single street address, or a single lot number and plat description, or a single Island County tax parcel number. (Ord. 626 § 3 Att. B (part), 2002)

13.08.100 Voluntary termination of water hook-up rights, water connections or water connection permits.

Owners of out-of-town water hook-up rights or connections, or in-town water hook-up rights or connections, or permits for connections, may terminate these rights or connections by filing with the Town a request for termination and a legal description of the real property to which the water is appurtenant. Terminations shall not be accepted for water services required for occupied structures or for fire protection. No refund of any costs or payments associated with acquisition of a water hook-up right or connection shall be made by the Town when a service or right is terminated. (Ord. 626 § 3 Att. B (part), 2002)

13.08.110 Water management—Land subdivision and private water wells.

A. If water supplies cannot support growth demands, the health, safety, and welfare of existing users shall not be compromised to provide new water connections.

B. In accordance with RCW Chapter 58.17 and other applicable laws and regulations existing on the date of the ordinance codified in this chapter, the town council is required to certify the adequacy of water supplies to support subdivision of land in the Town. Until such time as said laws and regulations are amended to require otherwise, if water supplies available to a proposed subdivision of land are inadequate, the land subdivision application shall not be accepted by the Town. In its consideration of any application for the subdivision of land, the town council shall certify that an adequate supply of water is available for each of the lots to be created pursuant to the land subdivision application only if: (1) a water hook-up right for each lot in the proposed subdivision has been issued to the property that is the subject of the subdivision application, on or before the date that the applicant submits his/her land subdivision application to the Town and (2) each of said water hook-up rights remain issued to the property at all times from the date of the subdivision application and until final plat approval of the subdivision by the town council. An applicant shall be entitled to make application for the new water hook-up rights required to serve each of the lots in the proposed subdivision in conjunction with the land subdivision application, provided that water supplies are adequate on the date of the application for the issuance of said water hook-up rights. The applicable water hook-up right fees shall be paid on the date of submission of the application for said water hook-up right.

Following the purchase of any water hook-up rights in conjunction with the application for the subdivision of land, should the subdivision application not be approved and/or the final plat of the subdivision not be recorded with the Island County auditor in accordance with all applicable laws, regulations and conditions imposed by the town council in conjunction with the approval of the subdivision application, the water hook-up rights issued for the subject property based on an application for water service filed in conjunction with the application for the proposed land subdivision shall expire immediately. Furthermore, if the number of lots in the proposed subdivision is reduced at any time following the filing of the application for land subdivision, the water hook-up rights associated with reduction in number of lots

in the proposed subdivision shall expire immediately. Upon the expiration of any water hook-up right issued pursuant to this paragraph and upon receipt of a written request for refund, the Town shall refund the purchase price of the water hook-up right No refund shall be made of any monthly service charges paid by the applicant in conjunction with any water hook-up right issued under this paragraph prior to the expiration of any such water hook-up right.

Any water hook-up right issued pursuant to this Section 13.08.110 shall not be transferable.

C. All land subdivision applications and structural building applications, as a condition of approval, shall provide for fire protection in accordance with Ordinance 323B (Fire Protection) and Chapter 16.24 of the Coupeville Development Regulations.

D. All land subdivision applications, as a condition of approval, shall provide for the extension and, where necessary, the upgrading of the water system to adequately supply water for both the subdivision's domestic and/or commercial consumption, and fire protection.

Notwithstanding the aforesaid, where existing facilities must be upgraded to permit the extension of the system, the Town may enter into a cost sharing agreement and/or latecomer agreement for the portion of the project cost that is attributable to the required upgrading of the system. The town's share of the cost shall not exceed seventy-five (75) percent of the total value of the project, and the latecomer agreement shall be for a period not to exceed fifteen (15) years. The town's share of the cost of a project may be made in the form of a credit for one or more water hook-up fees for water connections to lots supplied by the water main extension.

E. To ensure the public health and safety, all dwellings located within the town limits shall obtain water from the public water supply system through a town-approved service connection and water meter for all uses, other than noncommercial irrigation and livestock watering. The use by any customer of a private water well for noncommercial irrigation and livestock watering, on property containing a dwelling unit, shall require the installation and maintenance by the customer of a town-approved backflow prevention assembly immediately downstream of the town's water meter to protect the public water supply system from potential contamination.

Notwithstanding the aforesaid, at any time the Town is unable to supply a new water connection due to an inadequate capacity of the water distribution system, or a shortage of supply that requires the Town to impose a temporary moratorium on the issuance of water hook-up rights, a dwelling may be supplied with water for domestic purposes from a private well provided:

1. The well site is inspected and approved as a new well source by Island County health department staff. This approval shall be submitted to the Town in the form of a completed Island County water availability verification form (Section B), or other similar forms adopted by Island County from time to time, signed by a county representative, together with a copy of all required data submitted by the owner of the dwelling to Island County for its evaluation.

2. Where the dwelling is connected to the town sewer system, for sewer billing purposes the private well owner shall apply and pay for the installation by the Town of a water meter to measure the water going to the dwelling. The meter will be installed in accordance with Section 13.08.060 of this chapter, and shall also be in a location suitable for the future connection of the dwelling to the town's water system.

3. That the well is equipped to Washington Department of Ecology standards, including the installation of a check valve, wellhead meter, isolating valve, probe pipe and screened air vent.

4. When water system capacity or water supply becomes available, the property owner shall, within six months of receipt of written notice from the Town, make written application and apply and pay for a water hook-up right and water connection permit, and connect the dwelling to the town's water system, and within six months thereafter, abandon the private well in accordance to Washington Department of Ecology standards or convert the use of the private well to noncommercial irrigation or livestock watering.

5. While the private well owner is obtaining water from the private well for domestic use, to compensate the Town for the maintenance of the water system to supply water for fire protection, the customer will pay a monthly service and reserve capacity charge equal to fifty (50) percent of the in-town charge for a five-eighths by three-fourths-inch water meter listed in Section 13.08.010 of this chapter. If the private well owner is a customer of the town sewer system, to compensate the Town for the additional cost to maintain the sewer billing meter, the reserve capacity charge shall be increased to the appropriate charge used for the sewer billing listed in Section 13.08.010 of this chapter. (Ord. 626 § 3 Att. B (part), 2002)

13.08.120 Water conservation.

A. It is the policy of the Town to promote water use conservation, as outlined in the town's water conservation plan dated August 26, 1993 or latest edition thereof, attached hereto by reference as Appendix A.

B. In response to a temporary water shortage due to operational problems, the mayor shall have authority to implement the town's water shortage response plan dated August 26, 1993 or latest edition thereof, attached hereto by reference as Appendix B. (Ord. 626 § 3 Att. B (part), 2002)

13.08.130 Interruptable water supply.

A. Any industrial or agricultural customer may apply for an interruptable water service connection. The regulations applying to an interruptable water service connection shall be the same as all other categories of connections, with the exception that the Town may interrupt the water supply during specified nonemergency conditions.

Nonemergency conditions shall be considered the inability of the Town, under normal operating conditions, to meet peak day demand. Normal operating conditions shall be considered as when the Town is producing water at full capacity from all Washington Department of Health approved sources of supply. Emergency conditions shall be considered as any operating conditions under which there is a failure of one or more components of the water system (i.e., wells, treatment, storage or distribution), or where there is an extraordinary demand to supply water for fire protection.

B. The agreement of the Town to provide an interruptable water service connection is conditional upon the ability of the water supply to the customer to be interrupted without infringing upon public health, by supplying:

1. A separate metered water connection for continuous or standby (emergency) nondomestic demand; and

2. Where applicable, a separate metered connection for any domestic water demand.

A standby connection shall be defined as a water connection intended for use only in an emergency when the customer's normal daily supply from a source other than the town's water system is disrupted.

C. In nonemergency conditions, at any time the water system is unable to fully recover equalizing storage in its reservoirs during any twenty-four (24) hour period, the mayor is authorized to shut off or impose other lesser method of restriction of water service to all customers with an agreement for interruptable service. Upon issuing such authorization, the mayor shall:

1. Give eight hours notice by telephone (except in the case of an emergency) to those customers with interruptable water service connections, followed the same day by written notice delivered by certified mail; and

2. Apply the shut off or lesser method of restriction of water service equally to all customers with interruptable water service connections; and

3. Initiate within two days the Stage 3 water conservation program specified in the town's water shortage response plan; and

4. Restore all or a portion of the supply to the customers with interruptable water service connections as soon as operational conditions permit when the mayor determines that the circumstances that necessitated the interruption of service have ceased or that measures have been adopted to rectify the water shortage without the interruption of water service to

all customers with interruptable water service connections.

D. Industrial or agricultural customers that are granted an interruptable water service connection, shall pay water rates established in Section 13.08.010 of this chapter at ten (10) percent discount; a further ten (10) percent discount shall be applied to such customers with a standby service connection.

E. During emergency conditions, without prior notice, the mayor is authorized to shut off or impose other lesser method of restriction of water service to all customers with interruptable water service connections, consistent with the town's water shortage response plan. (Ord. 626 § 3 Att. B (part), 2002)

13.08.140 Water system maintenance.

A. No person shall tamper or interfere with the town's water system, nor shall any person, except as authorized by the Town, connect to or operate any pipe, valve, meter, hydrant or other part of the water system.

B. The Town reserves the right to require any customer to install as a condition of receiving or maintaining water service a pressure reducing valve, air gap or backflow prevention assembly, or similar devices at any location where the Town determines a need to protect the town's water system from physical damage or contamination.

C. The supply of water to any customer is contingent upon:

1. The requirement that the customer shall take all measures necessary to prevent the contamination of the plumbing system within his/her premises and the town's water distribution system that may occur from backflow from a cross connection. These measures shall include the prevention of backflow under any back pressure or back siphonage condition, including the disruption of supply from the town's system that may occur by reason of routine system maintenance or during emergency conditions, such as a water main break.

2. The customer installing, operating and maintaining at all times his/her plumbing system in compliance with the current edition of the Uniform Plumbing Code as it pertains to the prevention of contamination, and protection from thermal expansion due to a closed system that could occur with the present or future installation of backflow preventers on the customer's service and/or at plumbing fixtures.

3. The customer installing all backflow prevention assemblies requested by the Town, and the maintenance of those assemblies in good working order. The assemblies shall be of a type, size and make approved by the Town and the State Department of Health. The assemblies shall be installed in accordance with all standards established by the Town.

4. The customer having all backflow prevention assemblies tested upon installation, annually thereafter or when requested by the Town, after repair and after relocation, by a town-approved and State Department of Health certified backflow prevention assembly tester (BAT). The results of the tests shall be reported within thirty (30) days to the Town on a form provided by or approved by the Town.

5. In keeping with changes to state regulations, or the town's risk management policies, the customer's compliance with the imposition of retroactive requirements for additional cross connection control measures.

6. The customer's acknowledgment of the town authority to discontinue water supply within seventy-two (72) hours of giving notice, or a lesser period of time if required to protect the public health, if the customer fails to cooperate in the installation, maintenance, repair, inspection or testing of backflow prevention assemblies or air gaps required by the Town.

7. The customer shall be responsible to indemnify and hold harmless the Town for all contamination of the customer's plumbing system or the town's water distribution system that results from an unprotected or inadequately protected cross connection within his/her premises. This indemnification shall pertain to all backflow conditions that may arise for the utility's suspension of water supply, recognizing that an air gap separation on the customer's service pipe would otherwise be provided by the Town to supply water to the customer, and the air gap would

necessitate the customer providing adequate facilities to collect, store and pump water for his/her premises.

D. The Town shall not be liable for damages nor will allowances be made for loss of production, sales or service in case of water pressure variations, or revisions to pressure within the system, or in case the operations of the town's sources of water supply or means of distribution fails or is curtailed, suspended or interfered with, or for any cause reasonably beyond the town's control. Such pressure variations, failure, curtailment, suspension, interruption or interference shall not be held to constitute a breach of contract on the part of the Town, or in any way affect any liability for payment by the customer for rates, fees and charges due under this chapter.

E. If a water meter or other town-owned pipes and equipment is located for the benefit of the customer on the customer's premises, outside of a town utility easement, as a condition of providing water service the customer shall make no claim nor sue the Town for any damages due to water leakage or other causes arising from the operation, maintenance or replacement of said meter, pipes and equipment. Upon change of ownership or use of the premises, the Town may require that the meter be relocated to within the town street, Island County road right-of-way or town utility easement in accordance with Section 13.08.060 of this chapter. (Ord. 626 § 3 Att. B (part), 2002)

13.08.150 After hour and weekend call-ins—Per hour rate.

The per hour rate for after four-thirty p.m. Monday through Friday, weekend and holiday call-ins from private property owners to request a water meter shut-off due to a nonemergency problem on the customer side of the water meter may be a minimum of fifty dollars ($50.00) per call, for the first hour, plus fifty dollars ($50.00) for each additional hour, or portion thereof. (Ord. 626 § 3 Att. B (part), 2002)

13.08.160 Standards of construction.

The installation of new and replacement water mains, services and meter settings shall be in accordance with the town "Standards for Construction of Water Mains, Sewers and Storm Drains" as adopted by the Town by resolution and amended or revised from time to time. (Ord. 626 § 3 Att. B (part), 2002)

Chapter 13.16

WATER AND SEWER BILLS

Sections:

13.16.010 Monthly water/sewer bill.
13.16.020 Period of delinquency—Extinguishment of water or sewer service after delinquency—Reconnection charge.
13.16.030 Delinquent charges.
13.16.040 Water and sewer service charges during periods when water service is abated.

13.16.010 Monthly water/sewer bill.

A. The monthly water/sewer bill shall reflect the total water used, the total charged for the "water rate" combined with the "service and reserve capacity charge," and as a separate item the total charged for the "sewage rate" combined with the sewage "service charge."

B. The water and sewer rates (Section 13.08.010 and Section 13.12.040 of this title), monthly water service and reserve capacity charges (Section 13.08.010), and monthly sewer service charges (Sections 13.12.020 and 13.12.030 of this title) shall accrue from the date of the purchase of a water connection permit and sewer connection permit.

C. The Town shall submit all water and sewer billings to the owner of the property obtaining service. (Ord. 526 Part D § 1, 1996)

13.16.020 Period of delinquency—Extinguishment of water or sewer service after delinquency—Reconnection charge.

A. All water and/or sewer billing by the Town shall be delinquent if not paid within thirty (30) days from the date of billing. In the event that a water and/or sewer billing shall become delinquent, the Town shall issue a notice to the owner of the property to which the services are provided stating that the Town shall terminate water service on the tenth day following the date of delivery of the notice. Said notice shall be deemed delivered on the date the Town deposits the notice in the U.S. Mail and shall be mailed to the owner of the property at the regular billing address of the owner. The Town shall have no obligation to provide notice of delinquency and termination of utility services to any person occupying or renting the subject property.

B. In the event that the Town terminates water service under subsection A of this section, as a result of a delinquent billing, water service shall not be reinstated by the Town until such time as the delinquent bill plus the charges assessed pursuant to this chapter have been paid in their entirety.

C. At any time prior to the establishment of a water service connection relating to a specific water hook-up right, said water hook-up right shall be terminated upon delinquency in the payment of the monthly service and reserve capacity charge established in Section 13.08.010 of this title after a period of ninety (90) days from the due date of the charge. In the event that a water hook-up right shall become delinquent, the Town shall issue a written notice to the owner of the water hook-up right stating that the water hook-up right shall be terminated on the tenth day following the date of delivery of the notice unless all delinquent charges are paid on or before said date. Said notice shall be deemed delivered on the date the Town deposits the notice in the U.S. Mail and shall be mailed to the owner of the water hook-up right at the regular billing address of the owner. There shall be no reinstatement of a water hookup right terminated pursuant to this subsection C.

D. All delinquent sewer billings and costs related to the termination of sewer service, including, but not limited to the removal of water meters, and removal of sewer laterals, incurred by the Town under subsection C of this section, shall become a lien upon the real property served; said lien shall be in accordance with and foreclosed in the manner set forth in the Revised Code of Washington. In the event of foreclosure of lien, the person and/or real properties against whom the foreclosure occurs shall pay the Town's reasonable attorney's fee and court

costs for the foreclosure. (Ord. 526 Part D § 2, 1996)

13.16.030 Delinquent charges.

All water service charges, connection fees, rates or other fees levied under this chapter not paid within thirty (30) days of the date of billing shall be considered delinquent. All delinquent billings shall bear interest at the rate of eight percent per annum of the delinquent amount, plus a ten dollar ($10.00) late fee shall be assessed to each delinquent bill. (Ord. 526 Part D § 3, 1996)

13.16.040 Water and sewer service charges during periods when water service is abated.

A. During periods of time when water service is abated (temporarily disrupted) to a residence, building or structure, there shall be charged the monthly water and sewer service charges as outlined in subsections 13.08.010C and 13.12.030A of this title.

B. No charge will be made for the turning off and on of water service during the Town's normal working hours. (Ord. 526 Part D § 4, 1996)

Appendix Y

Water Supply and Demand Forecast

Water Right Self-Assessment

Consistency Statement

CALCULATED NUMBER OF EQUIVALENT SINGLE-FAMILY RESIDENTIAL UNITS (ERUs)

Account Code	Customer Description	{1} Number of Active Accounts	{2} Total June-July Use (cubic ft)	{3} Average Summer Day Demand (gpd)	{4} Peaking Factor for MDD	{5} Estimated Average MDD (gpd)	{6} Calculated ERUs	Ref.
In-town customers								
1	Single-family residential	591	729,804	151	2.45	371	591	"C"
1.5	Apartments and Condos bldgs.	14	59,591	522	1.28	668	25	"JH"
1.7	Mobile home parks	3	185,710	7,591	1.68	12,752	103	"C"
2	Commercial, general retail and small office	74	130,787	217	1.10	238	48	"C"
2.3	Motels and inns	4	31,277	959	2.67	2,560	28	"C"
2.5	Careage (extended care home)	1	109,580	13,437	1.10	14,781	40	"JH"
3	Government, offices	34	22,697	82	1.42	116	11	"JH"
3.1	Schools	1	24,507	3,005	2.95	8,865	24	"JH"
3.3	Island County, offices	1	69,137	8,478	1.42	12,038	32	"JH"
3.7	Hospital	1	100,500	12,324	1.30	16,021	43	"JH"
4	Churches	4	3,240	99	4.00	397	4	"JH"
Out-of-Town								
5	Single-family residential	169	214,234	155	2.45	381	173	"C"
6	Commercial, general retail	14	46,991	412	1.30	535	20	"C"
6.3	Ft. Casey SPU campus	1	76,138	9,336	1.40	13,071	35	
7	Government, including ferry terminal	8	8,743	134	1.40	188	4	
7.3	Fort Casey State Park	1	23,079	2,830	1.40	3,962	11	
	Total:	921	1,836,015			Total:	1,192	

Notes:

[a] Billing codes are 1, 2, 3, 4, 5, 6, and 7. Data extracted for individual categories are designed by decimal.

[b] Peaking factors denoted by "C" are from Town of Coupeville 1992 water demand study of water use by customer class, peaking factors denoted by "JH" are from the Johns Hopkins University "Commercial Water Use" research project, where a reference could not be found, a peaking factor of 1.40 was assumed.

[c] ERUs calculated by dividing column 2 by the MDD (in cf/day) for in-town S-F homes 371 gpd/ERU = 49.6 cf/day

[d] The 1992 recorded MDD for a representative sample of in-town S-F homes was 378 gpd. With an allowance of 30% for future loss of water conservation efficiency the MDD for single-family residences used for design is 474 gpd/ERU.

[e] WA DOH authorized number of connections (letter dated February 1, 2008) is 1385 ERUs

WATER PRODUCTION RECORDS

(gallons)

	January	February	March	April	May	June	July
1990	8,067,000	6,768,000	8,350,000	7,861,000	9,154,000	9,449,000	12,191,000
1991	8,740,000	7,135,000	6,802,000	7,968,000	8,126,000	7,609,000	10,820,000
	Water consevation program started in 1992						
1992	7,099,000	6,406,000	7,822,000	7,197,000	6,709,000	7,949,000	7,487,000
1993	5,968,000	5,169,000	6,236,000	6,013,000	6,305,000	7,308,000	7,142,000
1994	6,422,000	5,682,000	6,636,900	6,140,600	6,942,800	7,638,200	8,217,600
1995	7,079,700	6,805,000	6,680,900	6,192,000	7,403,600	7,374,500	8,552,500
1996	8,341,500	7,254,500	6,707,500	6,309,500	7,156,500	7,668,500	9,279,500
1997	7,315,500	6,414,500	6,940,500	6,910,500	7,845,500	7,170,500	8,493,500
1998	6,863,500	6,813,800	7,864,500	7,788,100	8,298,500	7,701,000	8,542,800
1999	7,674,500	6,882,500	7,938,500	7,229,000	7,528,500	7,285,400	7,499,800
2000	7,118,860	5,948,046	6,613,729	5,714,880	6,335,000	6,447,270	8,075,440
2001	5,945,730	5,241,360	6,089,200	5,833,220	6,549,500	6,924,900	8,045,700
2002	7,036,200	6,128,500	6,198,200	6,724,950	6,550,350	7,124,250	8,283,550
2003	5,673,913	5,675,848	5,742,550	5,852,121	6,481,385	7,947,372	9,058,405
2004	6,317,912	5,710,492	6,680,109	6,861,066	6,834,175	7,118,040	10,299,856
2005	6,195,484	5,726,123	7,202,144	6,283,697	7,204,952	6,935,982	8,370,098
2006	6,493,746	5,917,873	6,935,336	6,365,182	7,646,274	7,733,729	9,005,020
2007	6,130,558	6,069,918	6,786,312	7,270,616	8,173,926	7,961,133	9,487,824
2008	6,934,246	6,007,665	6,944,293	7,600,531	7,046,755	7,475,611	9,658,150

WATER PRODUCTION RECORDS

(gallons)

	August	September	October	November	December	TOTAL	MAXIMUM DAY
1990	12,295,000	9,731,000	8,571,000	7,118,000	8,835,000	**108,390,000**	491,000
1991	10,048,000	8,172,000	7,846,000	6,411,000	8,783,000	**98,460,000**	NA
	Water consevation program started in 1992						
1992	8,183,000	6,769,000	6,040,000	5,688,000	5,653,000	**83,002,000**	345,000
1993	7,778,000	6,997,000	6,290,000	6,207,000	5,022,420	**76,435,420**	256,000
1994	8,839,400	6,931,300	6,642,400	6,395,300	6,557,900	**83,046,400**	342,000
1995	7,919,500	7,349,500	8,258,500	7,188,600	7,143,500	**87,947,800**	356,000
1996	8,630,500	6,872,500	6,487,500	7,461,500	7,380,500	**89,550,000**	337,000
1997	9,070,800	7,050,000	7,372,200	7,576,500	6,982,500	**89,142,500**	388,000
1998	9,581,500	8,537,500	7,479,500	6,950,500	7,071,500	**93,492,700**	395,000
1999	8,042,100	7,472,000	7,123,200	6,895,240	6,349,984	**87,920,724**	347,000
2000	7,778,300	6,252,400	6,508,100	5,992,650	5,246,020	**78,030,695**	403,000
2001	7,686,000	6,796,100	7,236,300	6,175,700	6,217,600	**78,741,310**	343,200
2002	8,086,540	6,963,976	6,514,100	5,921,499	5,770,931	**81,303,046**	402,000
2003	8,838,543	7,081,357	6,267,275	5,932,532	6,278,281	**80,829,582**	430,000
2004	8,706,126	6,646,930	5,905,899	6,150,920	5,920,297	**83,151,822**	471,914
2005	9,287,369	7,276,093	6,321,330	6,336,049	6,493,939	**83,633,260**	438,000
2006	9,473,243	7,637,650	6,896,507	6,661,269	6,520,988	**87,286,817**	462,832
2007	9,354,071	7,239,782	7,151,150	5,506,588	6,872,365	**88,004,243**	465,659
2008	8,535,049	8,743,232	7,836,011	7,071,259	7,380,856	**91,233,658**	409,417

WATER SUPPLY ESTIMATE

ALLOWABLE NUMBER OF CONNECTIONS (ERUs) BASED ON PRODUCTION DEVELOPED TO EQUAL WATER RIGHT RATE OF WITHDRAWAL (970 gpm):

	Planned Production (gpm)					
SOURCE OF SUPPLY	2009	2014 Option A	2014 Option B	2020	2030	
In-Town WTP						
Well No. 4 (used as lag source)	210	210	210	210	off	{a}
Well No. 7 (used as lag source)	210	210	210	210	210	{a}
Sub-total	420	420	420	420	210	
Ft. Casey WTP						
Ft. Casey Well Field						
Well Nos, 1-87 to 4-87	72	27	off	off	off	{a}
Well No. 1-90	40	40	40	40	40	{a}
Well No. 1-06	45	45	45	45	45	{a}
Added well in upper well field		45		45	45	{a}
Keystone Hill Wells						
Well No. 1-08			250	250	250	{a}
Added Keystone Hill well					250	{a}
Sub-total	157	157	335	380	630	{b,c}
Total gpm	577	577	755	800	840	
ALLOWABLE NUMBER OF ERUs Based on 474 gpd/ERU and reduction of 4% for backwash from Ft. Casey supply	1,734	1,734	2,253	2,384	2,475	
INCREASE IN ALLOWABLE ERUs			519	650	742	
CURRENT NUMBER OF AVAILABLE ERUs (End of 2008)			235	235	235	
Available production [{a} x 24 hrs]	830,880 gpd					
Maximum Recorded MDD since 1992	471,914 gpd					
Available for new customers	358,966 gpd					
ERUs based on 474 gpd/ERU	757 ERUs					
Minus contingency allowance	522 ERUs					{d}
Available ERUs based on production rate			**754**	**885**	**977**	

Water Supply Estimate (continued)

ALLOWABLE NUMBER OF CONNECTIONS (ERUs) BASED ON WATER RIGHT ANNUAL WITHDRAWAL (606 acre-feet):

Available water rights	197,452,253	gallons {e}	606.0	acre-feet	2,020	ERUs
Maximum annual water use (2008)	91,233,658	gallons {e}	280.0	acre-feet	933	ERUs
Available for new customers {e}			326.0	acre-feet	1,087	ERUs

Notes:

{a} Production rates assume wells are periodically rehabilitated to maintain capacity.

{b} Production from Ft. Casey greater than 200 gpm requires expansion of water treatment plant capacity

{c} Upper well field at Ft. Casey will remain in production to provide iron for removal of arsenic from Keystone Hill wells.

{d} Contingency allowance for current number of available ERUs allows for reduced well production due to need for well rehabilitation, unclaimed water shares, lead time for connection of new source, increased per capita water use with reduced conservation effectiveness, etc.

{e} WA DOE assignment of water right annual withdrawal allows 0.3 acre-feet/ERU.

WATER DEMAND ESTIMATE

ESTIMATED NUMBER OF ADDITIONAL CONNECTIONS (ERUs) WITHIN RETAIL SERVICE AREA PRESENTLY SUPPLIED BY TOWN DISTRIBUTION SYSTEM

POTENTIAL NEW CUSTOMERS WITHIN TOWN OF COUPEVILLE

	Lots	ERU/lot	ERUs
Single family	157		
minus vacant lots with a water hookup	-62		
minus reserved for unclaimed hookup right	-10		
minus excess hookup rights on already developed lot	-3		
sub-total	82	1	82
Single family potential (for subdivision)	407	1	407
Multi family potential	67	0.5	33.5
		total	**523**

{a}

NOTE:
Estimate of land use inventory from 2002 survey by Larry Cort, Town Planner. Inventory was based up on physical inspection of property.

ALLOWANCE FOR POTENTIAL GROWTH IN EXISTING INSTITUTIONAL CUSTOMERS

Schools	10	ERUs			
Hospital and nursing homes	15	ERUs			
County offices	10	ERUs	**45**	ERUs	{b}
Miscellaneous commercial	10	ERUs			

POTENTIAL NEW SERVICES IN PRESENT OUT-OF-TOWN SERVICE AREA

Madrona Way	20	ERUs			
Long Point	9	ERUs			
Engle Road & SPU	24	ERUs	**53**	ERUs	{c}
Ft. Casey Road	0	ERUs			
Ebey Road	0	ERUs			
State park/Ebey landing	0	ERUs			

Note: SPU demand based on previous expansion plans

TOTAL {a} {b} & {c} **621** ERUs

ESTIMATED NUMBER OF ADDITIONAL CONNECTIONS (ERUs) WITHIN RETAIL SERVICE AREA BEYOND CURRENT TOWN DISTRIBUTION SYSTEM

POTENTIAL NEW SERVICES IN CENTRAL WHIDBEY GROWTH AREA

Rural Zone (1 ERU per 5 acres)		5,850	acres			
Minus	Madrona Way	-391	acres	Currently supplied		
	Long Point	-65	acres	Currently supplied		
	Engle Road	-295	acres	Currently supplied		
	Ft. Casey Road	-167	acres	Currently supplied		
	Ebey Road	-153	acres	Currently supplied		
	Crockett Lake	-385	acres	Not buildable		
	Hwy 20, south of Crockett Lake	-125	acres	Park extension, no demand		
	Crockett Lake W.D.	-130	acres	Supplied by others		
	State park/Ebey landing	-160	acres	Currently supplied		
	Navy OLF	-657	acres	Assumed not buildable		
		3,322	acres	664	ERUs	
Rural Forest (1 ERU per 10 acres)		1,120	acres	112	ERUs	
Rural Agricultural (1 ERU per 10 acres)		900	acres	90	ERUs	
Commercial Agricultural (1 ERU per 20 acres)		1,660	acres	83	ERUs	
Minus	Existing single-family wells	200	lots			
	Sarkisian Springs service area	19	lots			
	Long Point Water Co. service area	102	lots	378	ERUs	
	Kineth Claim service area	40	lots			
	Barrett Road & other Group B (±)	17	lots			
Minus	Land within Ebey Land Trust that is not developable. (1 ERU per 20 acres)	1,800	acres	-90	ERUs	
			Total	**481**	ERUs	{d}
	Total of potential new customers {a} {b} {c} & {d}			**1,102**	ERUs	
	Number of ERUs sold since start of 2002 to end of 2008 (commercial customers assessed in ERUs)			**138.5**	ERUs	
	Remaining potential customers to be served in Retail Service Area			**963**	ERUs	

ANNUAL DEMAND FORECAST

Connection History

Equivalent single-family residential units (ERUs) added to system.

	1999	2000	2001	2002	2003	2004	2005	2006	2007	2008
Jan.			1		3.5			14		1
Feb.					11	1		2		
Mar.		2	1	1		1.5		16		
Apr.	1	2	1				2	6		
May					1.5		5	6		
June		1	1		1	1.5	10	1	2	
July	1			3						
Aug.					1	1	1		11	
Sept.			1	1		4	1		8	
Oct.					3	2.5		4	5	
Nov.			1.5			4				
Dec.	2		1	1	1					
Annual	4	5	7.5	6	22	15.5	19	49	26	1
				Total:	155	ERUs (	15.5	per year)		

The following plats, short plats or major institutional customers purchased mulitple ERUs:

2003	Penningtom Ridge Plat	11	ERUs
2004	Ninth & Gould SP 04-03	4	ERUs
2005	Kruger Farn Div 2 PP 05-02	5	ERUs
2005	NE Leach SP 05-02	3	ERUs
2005	Island County C-1132-04	4	ERUs
2006	Coupeville Reserve PP-05-04	14	ERUs
2006	Faris PP-05-03	16	ERUs
2007	Cascade Holding	19	ERUs

76 ERUs total
72 ERUs S-F residential

Estimated Populaiton Growth

The following information was obtained from the Town Planner or Water Billing Accounts:

Town of Coupeville - Population growth over last 8 years:	1.50%
Island County - Population growth over last 8 years:	1.00%
Current population within Town of Coupeville	1915
Current population supplied by Out-of-Town system: (200 ERUs x 2.4 occupants/ERU)	480

Note: The increase in the Out-of-Town population applicable to the demand forecast is based on the area currently served by the Town's distribtuion system. A major extension of the Out-of-Town system in the next 20-years is not anticipated.

Six-year Connection Projection

Number of ERUs, based on 1% growth

	2009	2010	2011	2012	2013	2014	Total
In-Town SF residential & commercial	1	2	2	2	2	2	11
In-Town plats & short-plats							
Misc short-plats (allowance)		4					4
Multi-family (allowance)		4					4
Commercial							
Restraurant (allowance)		3					3
Institutional							
School District growth (allowance)		4					4
Out-of-Town SF residential (allowance)							
Out-of-Town plats & short-plats							
SPU Campus				20			20
Wholesale supply							
Sarkisian Springs		10	2	1	1	1	15
Total	1	27	4	23	3	3	61

90 based on 1.5% growth

20-year Connection Projection

Number of ERUs, based on 1% growth

	end of 2014	2017	2020	2023	2026	2029	Total
In-Town SF residential & commercial	11	10	10	10	10	10	61
In-Town plats & short-plats							
Misc short-plats (allowance)	4	10	10	10	10	10	54
Multi-family (allowance)	4	0	4	0	4	0	12
Commercial							
Restraurant (allowance)	3	0	2	0	0	0	5
Institutional							
School District growth (allowance)	4	1	1	1	1	1	9
Island County, Hospitals, etc.	0	1	1	1	1	1	5
Out-of-Town SF residential (allowance)	0	2	2	2	2	2	10
Out-of-Town plats & short-plats	20	0	0	10	0	0	30
Wholesale supply	15	0	0	0	0	0	15
Total	61	24	30	34	28	24	201

300 based on 1.5% growth

20-year Estimate of Additional Water Demand

Assumed growth	1.0%	1.5%	
	28,914	42,660	gpd based on MDD of 474 gpd/ERU
	18.3	90.0	acre-feet/year based on 0.3 acre-feet/ERU

WATER RIGHT SELF-ASSESSMENT

Permit, Claim or Certificate	Name of Rightholder or Claimant	Priority Date	Source Name & Number	Primary or Supplement	Existing Water Rights		Forecasted 20-Year Source Demand		Forecasted 20-Year Excess/Deficiency	
					Maximum Flow Rate Qi	Maximum Annual Qa	Maximum Flow Rate Qi	Maximum Annual Qa	Maximum Flow Rate Qi	Maximum Annual Qa
Permits & Certificates										
1 880-D	Town of	1928	Well # 1	P	250	26				
2 1174-A	Coupeville	1950	Well # 2	P	150	42				
3 5618-A	"	1966	Ft. Casey	P	150	158				
4 G1-29378	"	1972	Well # 4	P	210	190				
5 G1-20359	"	1972	Well # 7	P	210	190				
Claims										
1										
				TOTAL	**970**	**606**	**353.0**	**307.0**	**617.0**	**299.0**

Intertie Name/Identifier	Name of Purveyor Providing Water	Existing Limits on Intertie Water Use		Existing Consumption Through Intertie		Intertie Supply Excess/Deficiency	
		Maximum Flow Rate Qi	Maximum Annual Qa	Maximum Flow Rate Qi	Maximum Annual Qa	Maximum Flow Rate Qi	Maximum Annual Qa
1							
	TOTAL						

Pending Water Right Applications	Name on Permit	Date Submitted	Primary or Supplement	Pending Water Rights	
				Maximum Flow Rate Qi	Maximum Annual Qa
1					
		TOTAL			

See accompanying Annual Deamnd Forecast in *2009 to 2014 Water System Plan*

Estimated 20-year Required Water Supply for WA DOE Water Right Self-assessment

Flow Rate (Qi)

Current Maximum Day Demand (MDD)	465,659	gallons
Required production to meet MDD	323	gpm
Estimated 20-year additional MDD	42,660	gall (assumes 1.5% growth)
Estimated added production to meet MDD	30	gpm
Required Production to meet 2029-year MDD	353	gpm
Current Water Rights (Qi)	970	gpm

Annual Withdrawal (Qa)

Current Annual Production	91,233,658	gallons
	280.0	acre-feet
Estimated 20-year added withdrawal for 90 additional ERUs (assumes 1.5% growth)	27.0	acre-feet
Required Withdrawal to meet 2029 demand	307.0	acre-feet
Curretn Water Rights (Qa)	606.0	acre-feet

WATER CONSERVATION

Estimate of Water Savings

Based on adopted water use efficiency measures

	Assumed MDD/ERU	Savings relative to WA DOH	
WA DOH Design criteria for systems without record of MDD	800	NA	
Assumed MDD for moderate water conservation program	600	200	25%
Town of Coupeville design criteria for MDD	**474**	**326**	**41%**
Town of Coupeville recorded single-family MDD	386	414	52%

Attachment 5 - Water System Plan and Small Water System Management Program Consistency Statement Checklist

Interim Guidance 11/06/2003

This consistency statement checklist is intended to ensure consistency of water system planning documents and adopted local comprehensive plans and development regulations. The expectation is that each local planning jurisdiction in which the water utility provides service will review the relevant water system planning information and provide a signed consistency statement to the utility for submittal to the Department of Health. If the local planning agency will not respond, the highest authority within the utility (chair of governing body, executive director of private companies, etc.) must sign to verify consistency of the plan information.

Water System Name: *TOWN OF COUPEVILLE* **PWS ID:** *00410R*

Planning Document Title: *Water System Plan, 2006 Amendment of Service Area* **Plan Date:** 2003 to 2008

Local Planning Jurisdiction: *Island County*

Consistency Statement: (Reference Municipal Water Law Section 5 and 8, amendment to chapter 90.03.386 and chapter 43.20 RCW)	Page(s) in Planning Document (completed by utility)	Yes No Not Applicable
The service area and land use identified in the water system plan is consistent with the *adopted comprehensive plan and adopted development regulations and policies.*	*See Attached*	*Yes*
FOR WATER SYSTEM PLANS ONLY - The growth projection used to forecast water demand for the service area is consistent with the adopted city/county's population growth projections (and commercial development projection if applicable). If a different growth projection was used, the alternative growth projection and methodology proposed is acceptable based on explanation given.	*See Attached*	*Yes*
FOR WATER SYSTEM PLANS ONLY - New potential large water users (that may have a significant impact on the water system) that the city/county is aware of have been identified in the water system plan.	*NA*	*NA*
FOR CITY-OWNED SYSTEMS ONLY- All policies regarding water service outside the corporate boundaries must be included in the water system plan. These policies are consistent with the adopted *comprehensive plan* and *development regulations.*	*See Town Code*	*Yes*
WHERE THE LOCAL PLANNING AGENCY IS UNABLE TO SIGN A CONSISTENCY STATEMENT - Provide documentation of efforts to coordinate with local agencies with a 60-day timeline for local agency to respond. Include: name of contact, date, type of effort attempted, and response from local agency.	*NA*	*NA*

I certify that the above statements are true to the best of my knowledge and that these statements support the conclusion that the subject planning document is consistent with adopted comprehensive plans, development regulations, and other policies.

Signature

July 6, 2006
Date

JEFF TATE, ASSISTANT DIRECTOR, ISLAND COUNTY
Printed Name, Title, & Jurisdiction

**For any issues of inconsistency, please provide comments on how they can be resolved.

Appendix Z

S.E.P.A Checklist

TOWN OF COUPEVILLE
4 NE Seventh
PO Box 725
Coupeville WA 98239
360.678.4461 • 360.678.3299 Fax

NANCY CONARD Mayor
LARRY KWARSICK Planner
DAVID PENROD Town Marshal
JUDY THOMAS Clerk Treasurer
MALCOLM BISHOP Public Works Director

TOWN OF COUPEVILLE
DETERMINATION OF NONSIGNIFICANCE (DNS)

DESCRIPTION OF PROPOSAL:

Adoption of a Update of the Town of Coupeville Water System Plan for the 2009 – 2014 planning period. Under WAC 246-290-100 the Town of Coupeville is required to prepare and submit a Water System Plan for review and approval of the Washington State Department of Health (WA DOH). The plan must be updated and submitted to WA DOH for approval every six years. The 2003 Water System Plan was revised in 2006. The purposes of this Water System Plan update are to provide:

1. An inventory of the major water system facilities;
2. A summary of improvements made to the system within the period of 1997 to 2008;
3. An evaluation of the present system;
4. Recommendations for improvements necessary for the system to comply with the Washington State Department of Health (WA DOH) Guidelines;
5. Budget level cost estimates for recommended system improvements to be included I the Town's Capital facilities Plan and annual Capital Facilities program; and
6. A report of the status of various management and operation programs required by the WA DOH.

This is a non-project action.

PROPONENT: Town of Coupeville

LOCATION OF PROPOSAL: Adoption of the updated Water System Plan applies to the entire Town of Coupeville, together with the town's water service area as approved by Island County and required under the Public Water System Coordination Act of 1977, Chapter 70.116 RCW. The proposal affects real property lying within in water service area which includes portions of Township 32N, Range 1E and Township 31N, Range 1E, W.M.

LEAD AGENCY: Town of Coupeville

The Town of Coupeville has determined that this Nonproject Action will not have a probable significant adverse impact on the environment, and that an environmental impact statement is not required under RCW 43.21.030(2)(C). These conclusions were made after review of a completed environmental checklist, the submitted Water System Plan, and other information on file with the lead agency. This information, including the Water System Plan, is available for view by the public on request at the Town Hall, 4 NE Seventh Street, Coupeville, WA.

[ ] There is no comment period for this MDNS.

[X] This DNS is issued under 197-11-350 RCW; the lead agency will not act on this proposal for 14 days from the date shown below. Comments must be submitted by **August 19, 2009**

The decision will become final at the expiration of the comment period. This final decision may then be appealed to the Town of Coupeville at the address shown below within 15 days, or no later than September 2, 2009.

Responsible Official Larry Kwarsick

Position/Title Town Planner Phone (360) 678-4461

Address P.O. Box 725, 4 NE Seventh Street, Coupeville, WA 98239

Date August 5, 2009 Signature 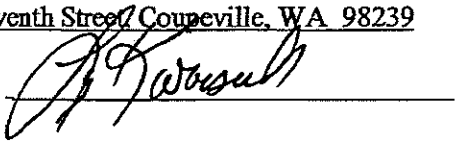

TOWN OF COUPEVILLE

ENVIRONMENTAL CHECKLIST

(WAC 197-11-960 Environmental checklist)

Purpose of Checklist

The State Environmental Policy Act (SEPA), chapter 43.21C RCW, requires all governmental agencies to consider the environmental impacts of a proposal before making decisions. An environmental impact statement (EIS) must be prepared for all proposals with probable significant adverse impacts on the quality of the environment. The purpose of this checklist is to provide information to help you and the agency identify impacts from your proposal (and to reduce or avoid impacts from the proposal, if it can be done) and to help the agency decide whether an EIS is required.

Instructions for Applicants

This environmental checklist asks you to describe some basic information about your proposal. Governmental agencies use this checklist to determine whether the environmental impacts of your proposal are significant, requiring preparation of an EIS. Answer the questions briefly, with the most precise information known, or give the best description you can.

You must answer each question accurately and carefully, to the best of your knowledge. In most cases, you should be able to answer the questions from your own observations or project plans without the need to hire experts. If you really do not know the answer, or if a question does not apply to your proposal, write "do not know" or "does not apply". Complete answers to the questions now may avoid unnecessary delays later.

Some questions ask about governmental regulations, such as zoning, shoreline, and landmark designations. Answer these questions if you can. If you have problems, the governmental agencies can assist you.

The checklist questions apply to all parts of your proposal, even if you plan to do them over a period of time or on different parcels of land. Attach any additional information that will help describe your proposal or its environmental effects. The agency to which you submit this checklist may ask you to explain your answers or provide additional information reasonably related to determining if there may be significant adverse impact.

Use of Checklist for Nonproject Proposals

Complete this checklist for nonproject proposals, even though questions may be answered "does not apply." In addition, complete the Supplemental Sheet for Nonproject Actions (part D).

For nonproject actions, the references in the checklist to the words "project," "applicant," and "property or site" should be read as "proposal," "proposer," and "affected geographic area," respectively.

TO BE COMPLETED BY APPLICANT | AGENCY COMMENT

A. BACKGROUND

1. Name of proposed project, if applicable:

   2009 to 2014 Water System Plan

2. Name of applicant:

   Town of Coupeville

3. Address and phone number of applicant and contact person:

   P. O. Box 725 (360) 678-4552
   Coupeville, WA 98239

4. Date checklist prepared:

   May 26, 2009

5. Agency requesting checklist:

   Town of Coupeville

6. Proposed timing or schedule (including phasing, if applicable):

   Adoption of plan August or September 2009

7. Do you have any plans for future additions, expansion, or further activity related to or connected with this proposal? If yes, explain.

   YES Plan is working document that may be amended periodically to reflect changes in capital program schedule.

8. List any environmental information you know about that has been prepared, or will be prepared, directly related to this proposal.

   None

9. Do you know whether applications are pending for governmental approvals of other proposals directly affecting the property covered by your proposal? If yes, explain.

   None

10. List any government approvals or permits that will be needed for your proposal, if known.

WA Department of Health approval of plan.

11. Give brief, complete description of your proposal, including the proposed uses and the size of the project and site. There are several questions later in this checklist that ask you to describe certain aspects of your proposal. You do not need to repeat those answers on this page. (Lead agencies may modify this form to include additional specific information on project description.)

This is an update of the Town's six-year water system plan in accordance with provisions of WAC 246-290.

12. Location of the proposal. Give sufficient information for a person to understand the precise location of your proposed project, including a street address, if any, and section, township and range, if known. If a proposal would occur over a range of area, provide the range or boundaries of the site(s). Provide a legal description, site plan, vicinity map, and topographic map, if reasonably available. While you should submit any plans required by the agency, you are not required to duplicate maps or detailed plans submitted with any permit applications related to this checklist.

The water service area of the Town, including all water facilities within the Town Limits and outside of the Town as described in the Island County Service Area Agreement attached thereto.

B. ENVIRONMENTAL ELEMENTS

1. EARTH

A. General description of the site (circle one): Flat, ~~rolling~~, hilly, steep slopes, mountainous, other_____

B. What is the steepest slope on the site (approximate percent slope)?

Maximum road slope for water main replacement (approx. 10%)

C. What general types of soils are found on the site (for example, clay, sand, gravel, peat, muck)? If you know the classification of agricultural soils, specify them and note any prime farmland. Clay, sand & gravel

D. Are there surface indications or history of unstable soils in the immediate vicinity? If so, describe.

Not known prior to specific projects for main replacement.

E. Describe the purpose, type and approximate quantities of any filling or grading proposed. Indicate source of fill.

Does not apply.

F. Could erosion occur as a result of clearing, construction, or use? If so, generally describe.

Does not apply

G. About what percent of the site will be covered with impervious surfaces after project construction (for example, asphalt or buildings)?

Does not apply

H. Proposed measures to reduce or control erosion, or other impacts to the earth, if any:

Town's erosion control plan for mains and facilities included in Town's Standard Plans and Specifications.

2. AIR

A. What types of emissions to the air would result from the proposal (i.e., dust, automobile, odors, industrial wood smoke) during construction and when the project is completed? If any, generally describe and give approximate quantities of known.

Dust during water main installation work.

B. Are there any off-site sources of emissions or odor that may affect your proposal? If so, generally describe.

Does not apply

C. Proposed measures to reduce or control emissions or other impacts to air, if any?

Street sweeping and flushing to control dust during construction of w water mains.

3. **WATER**

A. Surface:

i. Is there any surface water body on or in the immediate vicinity of the site (including year-round and seasonal streams, saltwater, lakes, ponds, wetlands)? If yes, describe type and provide names. If appropriate, state what stream or river it flows into.

Penn Cove, Admiralty Inlet, Crockett Lake, depending on water main construction program.

ii. Will the project require any work over, in, or adjacent to (within 200 feet) the described waters? If yes, please describe and attach available plans.

Specific projects not designed for WSP.

iii. Estimate the amount of fill and dredge materials that would be placed in or removed from surface water or wetlands and indicate the area of the site that would be affected. Indicate the source of fill material.

Does not apply

iv. Will the proposal require surface water withdrawals or diversions? Give general description, purpose and approximate quantities if known.

Does not apply

v. Does the proposal lie within a 100-year floodplain? If so, note location on the site plan.

Does not apply

vi. Does the proposal involve any discharges of waste materials to surface waters? If so, describe the type of waste and anticipated volume of discharge.

No

B. Ground:

i. Will ground water be withdrawn, or will water be discharged to ground water? Give general description, purpose, and approximate quantities if known.

Increased groundwater withdrawal with growth of populations, construction of additional points of withdrawal.

ii. Describe waste material that will be discharged into the ground from septic tanks or other sources, if any (for example: Domestic sewage; industrial, containing the following chemicals. . .; agricultural; etc.) Describe the general size of the system, the number of such systems, the number of houses to be served (if applicable) or the number of animals or humans the system(s) are expected to serve.

Does not apply

C. Water Runoff (including storm water):

i. Describe the source of runoff (including storm water) and method of collection and disposal, if any (including quantities, if known). Where will this water flow? Will this water flow into other waters? If so, describe.

Does not apply

ii. Could waste materials enter ground or surface waters? If so, generally describe.

Does not apply

D. Proposed measures to reduce or control surface, ground and runoff water impacts, if any:

Water conservation plan included with WSP.

4. **PLANTS**

A. Check or circle types of vegetation found on the site:

All found within service area.

_____ deciduous tree: alder, maple, aspen, other
_____ evergreen tree: fir, cedar, pine, other
_____ shrubs
_____ grass
_____ pasture
_____ crop or grain
_____ wet soil plants: cattail, buttercup, bulrush, skunk cabbage, other
_____ water plants: water lily, eelgrass, milfoil, other
_____ other types of vegetation

B. What kind and amount of vegetation will be removed or altered?

Water mains installed in road right-of-way.

C. List threatened or endangered species known to be on or near the site.

Does not apply

D. Proposed landscaping, use of native plants, or other measures to preserve or enhance vegetation on the site, if any:

Does not apply

5. **ANIMALS**

A. Circle any birds and animals which have been observed on or near the site or are known to be on or near the site:

Specific projects not designed for WSP.

birds: hawk, heron, eagle, songbirds, other
mammals: deer, bear, elk, beaver, other
fish: bass, salmon, trout, herring, shellfish, other

B. List any threatened or endangered species known to be on or near the site.

Does not apply

C. Is the site part of a migration route? If so, explain.

Does not apply

D. Proposed measures to preserve or enhance wildlife, if any:

Does not apply

6. **ENERGY AND NATURAL RESOURCES**

A. What kinds of energy (electric, natural gas, oil, wood stove, solar) will be used to meet the completed project's energy needs? Describe whether it will be used for heating, manufacturing, etc.

Electrical energy for pumps.

B. Would your project affect the potential use of solar energy by adjacent properties? If so, generally describe.

Does not apply

C. What kinds of energy conservation features are included in the plans of this proposal? List other proposed measures to reduce or control energy impacts, if any:

Energy conservation is primarily related to Town's water conservation program noted above.

7. ENVIRONMENTAL HEALTH

A. Are there any environmental health hazards, including exposure to toxic chemicals, risk of fire and explosion, spill, or hazardous waste, that could occur as a result of this proposal? If so, describe.

Does not apply

i. Describe special emergency services that might be required.

ii. Proposed measures to reduce or control environmental health hazards, if any:

B. Noise

i. What types of noise exist in the area which may affect your project (for example: traffic, equipment, operation, other)?

Does not apply. Specific construction projects not designed. For planned water main installation SEPA requirements covered by WAC 197-11-800 (24).

ii. What types and levels of noise would be created by or associated with the project on a short-term or a long-term basis (for example: traffic, construction, operation, other)? Indicate what hours noise would come from the site.

For water main repair and installation, construction noise for road work during normal working hours.

iii. Proposed measures to reduce or control noise impacts, if any:

Does not apply. Specific construction projects not designed.

8. LAND AND SHORELINE USE

A. What is the current use of the site and adjacent properties?

Does not apply. Specific construction projects not designed.

B. Has the site been used for agriculture? If so, describe.

Does not apply

C. Describe any structures on the site.

Does not apply

D. Will any structures be demolished? If so, what?

Does not apply

E. What is the current zoning classification of the site?

Does not apply

F. What is the current comprehensive plan designation of the site?

Does not apply

G. If applicable, what is the current shoreline master program designation of the site?

Does not apply

H. Has any part of the site been classified as an environmentally sensitive" area? If so, specify.

Does not apply

I. Approximately how many people would reside or work in the completed project?

Does not apply

J. Approximately how many people would the completed project displace?

Does not apply

K. Proposed measures to avoid or reduce displacement impacts, if any:

Does not apply

L. Proposed measures to ensure the proposal is compatible with existing and projected land uses and plans, if any:

Does not apply

9. **HOUSING**

A. Approximately how many units would be provided, if any? Indicate whether high, middle or low-income housing.

Provides for forecast increase in number of equivalent single-family residential unit by 90 in six-year period, 390 in 20-year period.

B. Approximately how many units, if any, would be eliminated? Indicate whether high, middle or low-income housing.

None

C. Proposed measures to reduce or control housing impacts, if any:

Does not apply

10. **AESTHETICS**

A. What is the tallest height of any proposed structure(s), not including antennas; what is the principal exterior building materials(s) proposed?

Does not apply. Any project not involving underground water main installations or repairs would address SEPA at time of design.

B. What views in the immediate vicinity would be altered or obstructed?

Does not apply.

C. Proposed measures to reduce or control aesthetic impacts, if any:

Does not apply.

11. **LIGHT AND GLARE**

A. What type of light or glare will the proposal produce? What time of day would it mainly occur?

Does not apply. Any project not involving underground water main installations or repairs would address SEPA at time of design.

B. Could light or glare from the finished project be a safety hazard or interfere with views?

Does not apply.

C. What existing off-site sources of light or glare may affect your proposal?

Does not apply.

D. Proposed measures to reduce or control light and glare impacts, if any:

Does not apply.

12. **RECREATION**

A. What designated and informal recreational opportunities are in the immediate vicinity?

Some Town wells located in parks or school grounds.

B. Would the proposed project displace any existing recreational uses? If so, describe.

No.

C. Proposed measures to reduce or control impacts on recreation, including recreation opportunities to be provided by the project or applicant, if any:

Well vaults and building designed for minimum size to house equipment.

13. **HISTORIC AND CULTURAL PRESERVATION**

A. Are there any places or objects listed on, or proposed for, national, state, or local preservation registers known to be on or next to the site? If so, generally describe.

Town's historic district, Ebey reserve.

B. Generally describe any landmarks or evidence of historic, archaeological, scientific or cultural importance known to be on or next to the site.

Does not apply. Specific construction projects not designed.

C. Proposed measures to reduce or control impacts, if any:

Does not apply.

TO BE COMPLETED BY APPLICANT | AGENCY COMMENT

14. TRANSPORTATION

A. Identify public streets and highways serving the site, and describe proposed access to the existing street system. Show on site plans, if any.

Does not apply. Specific construction projects not designed.

B. Is site currently served by public transit? If not, what is the approximate distance to the nearest transit stop?

Does not apply. Specific construction projects not designed.

C. How many parking spaces would the completed project have? How many would the project eliminate?

Does not apply. Specific construction projects not designed.

D. Will the proposal require any new roads or streets, or improvements to existing roads or streets, not including driveways? If so, generally describe (indicate whether public or private).

Does not apply. Specific construction projects not designed.

E. Will the project use (or occur in the immediate vicinity of) water, rail, or air transportation? If so, generally describe.

Does not apply. Specific construction projects not designed.

F. How many vehicular trips per day would be generated by the completed project? If known, indicate when peak volumes would occur.

Does not apply. Specific construction projects not designed.

G. Proposed measures to reduce or control transportation impacts, if any:
Does not apply.

TO BE COMPLETED BY APPLICANT

AGENCY COMMENT

15. **PUBLIC SERVICES**

A. Would the project result in an increased need for public services (for example: fire protection, police protection, health care, schools, other)? If so, generally describe.

Does not apply.

B. Proposed measures to reduce or control direct impacts on public services, if any.

Does not apply.

16. **UTILITIES**

A. Circle utilities currently available at the site: Electricity, natural gas, water, refuse service, telephone, sanitary sewer, septic system, other.

B. Describe the utilities that are proposed for the project, the utility providing the service, and the general construction activities on the site or in the immediate vicinity which might be needed.

Does not apply. Specific construction projects not designed.

17. **ECONOMIC CONDITIONS AND IMPACTS**

No water rate increase anticipated within six-year plan.

C. **SIGNATURE**

The above answers are true and complete to the best of my knowledge. I understand that the lead agency is relying on them to make its decision.

Signature _____

Date Submitted July 18, 2009

TO BE COMPLETED BY APPLICANT

AGENCY COMMENT

D. SUPPLEMENTAL SHEET FOR NONPROJECT ACTIONS (do not complete this section for project actions)

Because these questions are very general, it may be helpful to read them in conjunction with the list of the elements of the environment.

When answering these questions, be aware of the extent the proposal, or the types of activities likely to result from the proposal, would affect the item at a greater intensity or at a faster rate than if the proposal were not implemented. Respond briefly and in general terms.

1. How would the proposal be likely to increase discharge to water; emissions to air; production, storage, or release of toxic or hazardous substances; or production of noise?

   No impact anticipated other than construction noise during repair or installation of water mains.

   Proposed measures to avoid or reduce such increases are:

   None

2. How would the proposal be likely to affect plants, animals, fish, or marine life?

   No impact anticipated.

   Proposed measures to protect or conserve plants, animals, fish or marine life are:

   None

3. How would the proposal be likely to deplete energy or natural resources?

   Increased power consumption and withdrawal of groundwater.

   Proposed measures to protect or conserve energy and natural resources are:

   Town's water conservation program.

TO BE COMPLETED BY APPLICANT **AGENCY COMMENT**

4. How would the proposal be likely to use or affect environmentally sensitive areas or areas designated (or eligible or under study) for governmental protection; such as parks, wilderness, wild and scenic rivers, threatened or endangered species habitat, historic or cultural sites, wetlands, floodplains, or prime farmlands?

No impact anticipated.

Proposed measures to protect such resources or to avoid or reduce impacts are:

None

5. How would the proposal be likely to affect land and shoreline use, including whether it would allow or encourage land or shoreline uses incompatible with existing plans?

No impact anticipated.

Proposed measures to avoid or reduce shoreline and land use impacts are:

None

6. How would the proposal be likely to increase demands on transportation or public services and utilities?

Increases number of allowable customers on water system, and thus population.

Proposed measures to reduce or respond to such demand(s) are:

Does not apply.

7. Identify, if possible, whether the proposal may conflict with local, state, or federal laws or requirements for the protection of the environment.

No conflicts identified.